Champion®

# Service Replacement Parts

DH6000T-VHR

# M2 SERIES

## Models:

### DH6000T-VHR
### DH6000T

Tall hot water sanitizing machine w/fresh water rinse and built-in stainless steel electric booster, Optional Ventless Heat Recovery

### DH6000-VHR
### DH6000

Standard height hot water sanitizing machine w/ fresh water rinse and built-in stainless steel electric booster, optional Ventless Heat Recovery

NSF c UL us LISTED

championindustries.com

Issue Date: 1.30.26
Manual P/N 117472 rev. Ha
For machines beginning with S/N D22042134 and above

3765 Champion Boulevard
Winston-Salem, NC 27105
(336) 661-1556 Fax: (336) 661-1660
Toll-free: 1 (800) 858-4477

2674 N. Service Road, Jordan Station
Ontario, Canada L0R 1S0
(905) 562-4195 Fax: (905) 562-4618
Toll-free: 1( 800) 263-5798

Printed in the USA

**National Service Department**

3765 Champion Boulevard
Winston-Salem, NC 27105
(336) 661-1556 Fax: (336) 661-1660
Toll-free: 1 (800) 858-4477

2674 N. Service Road, Jordan Station
Ontario, Canada L0R 1S0
(905) 562-4195 Fax: (905) 562-4618
Toll-free: 1( 800) 263-5798

**ATTENTION**

The machine data plate is located at the lower left corner of the machine front panel.

# INSTALLATION DISCLAIMER

## CAUTION:

Plumbing and electrical connections should be made by qualified personnel who will observe all the applicable plumbing, sanitary, and safety codes and the National Electrical Code.

## Note:

Water Hammer Arrestor (meeting ASSE-1010 standard or equivalent) to be supplied (by others) in common water supply line at service connection.

## Plumbing Notes:

Because of the variation in house-supplied steam and water pressures, steam and water pressure regulating valves, (PRVs) may be needed. (Water PRV is standard on machines with booster). The PRVs can either be purchased from Champion Industries or obtained locally.

CHAMPION does not endorse using on-demand (tankless) water heating systems, as well as PEX and other plumbing materials that may limit water flow as these could impair machine performance. For optimal results, we recommend using appropriately sized conventional hot water tanks and standard copper water supply lines that adhere to our specifications. Not following these recommendations may void the manufacturer's warranty. Water hardness of 3 grains/US Gal. (0.83 Imp. Gal.) - 5.3 mg/L or less.

Note:

Freezing air must not be allowed to be drawn down into the heat recovery coil when building vent fan is off if direct vent ducting is connected to the machine.

## Optional Drain Tempering:

1/2" NPT cold water connection required. 1/2" NPT drain connection from back flow preventer to house drain, (FIELD INSTALLED and PLUMBED).

Copyright © 2026 All rights reserved. Printed in the USA.

# REGISTER YOUR PRODUCT AND ACTIVATE YOUR WARRANTY

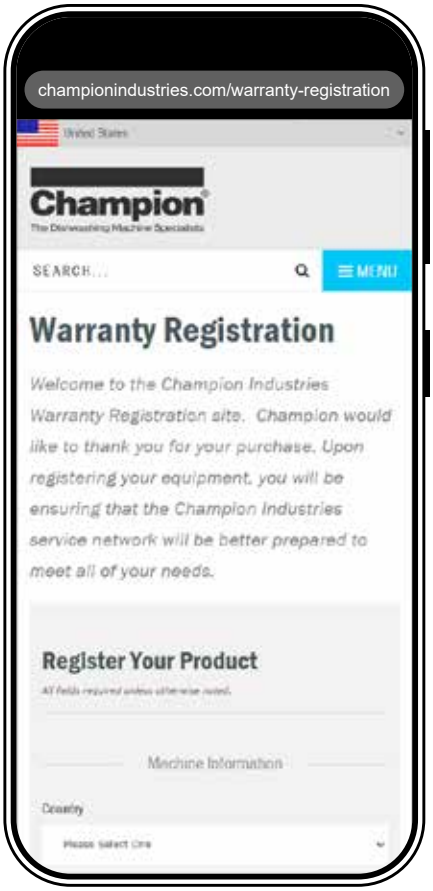


United States
https://www.championindustries.com/warranty-registration

Canada
https://www.championmoyerdiebel.ca/warranty-registration

- **Use a mobile device to scan the QR code above and connect to:**
- https://www.championindustries.com/warranty-registration for the U.S.A.
- https://www.championmoyerdiebel.ca/warranty-registration for Canada.

**or**

- **Enter a URL listed below to connect:**
- https://www.championindustries.com/warranty-registration for the U.S.A.
- https://www.championmoyerdiebel.ca/warranty-registration for Canada.

**or**

- FAX the form on the next page or mail the form in a stamped self-addressed envelope to your country address listed below:

| United States | Canada |
|---|---|
| **WARRANTY REGISTRATION**<br>3765 Champion Boulevard<br>Winston-Salem, NC 27105 | **WARRANTY REGISTRATION**<br>2674 N. Service Road, Jordan Station<br>Ontario, Canada L0R 1S0 |

# PRODUCT REGISTRATION BY FAX

## COMPLETE THIS FORM AND FAX TO:

**(905) 562-4618 in Canada**
**(336) 661-1660 in the USA**

## PRODUCT REGISTRATION

| Model: | Serial Number: |
|---|---|
| | |

Installation Date : ___/___ /____

Company Name: _____

Address: _____ _____ _____
*(Street)* *State/Province* *Zip/Postal Code*

Telephone: ( ) _____ --- _____

Contact: _____

Installation Company: _____

Address: _____

Telephone: _____

Contact: _____

**FAILURE TO REGISTER YOUR PRODUCT MAY VOID THE WARRANTY**

# IMPORTANT IMPORTANT

# Revision History

Specifications are subject to change based on continual product improvement. An owner can request a printed manual by calling 1(800) 858-4477 in the USA or 1(800) 263-5798 in Canada.

| Revision Date | Revised Pages | Serial Number Effectivity | Revision Description |
|---|---|---|---|
| 8.23.22 | All | D220421234 | Released first edition |
| 12.14.22 | 38-39 | D220421234 | Added Item 8, inline sensor, P/N 117011 |
| 4.4.23 | 40-41 | D230322622 | Revised tank probe fittings |
| | 29 | All | Added Item 25a, P/N 338433-S, service hood |
| | 37 | D230322622 | Added Item 31a, Label P/N 117663 |
| | 41 | D230322622 | Changed Item 17, Drain Valve to P/N 117659 |
| 7.5.23 | 42 | D230623061 | Added Optional Electric DWT assembly |
| 7.13.23 | 22-23 | D230623034 | Added Wientek HMI beginning with S/N230623034 |
| 12.4.23 | 41 | D230923373 | Replaced Item 18, Overflow Hose, P/N 114472 with Overflow Hose, P/N 117298. |
| 1.3.24 | 18-19 | All | Added Item 4, P/N 117752, Anti-kink spring |
| 1.25.24 | 37 | All | Increased quantitly of Item 23, slim relay, p/N 117423 from 4 to 5 |
| 6.6.25 | 42 | D230623061 | Corrected illustration part numbering |
| 1.30.26 | 38-39 | D250625906 | Added Verder Chemical Dispensing Pumps |

# LIMITED WARRANTY

Champion Industries, Bi-Line Systems (herein referred to as ("The Companies"), 3765 Champion Blvd., Winston-Salem, North Carolina, 27105) warrants machines and parts, as set out below:

**WARRANTY OF MACHINES:** The Companies warrant all new machines of its manufacture bearing the name Champion or Bi-Line and installed within the United States to be free from defects in material and workmanship for a period of one (1) year from the date of installation or fifteen (15) months from the date of shipment by The Companies, whichever occurs first. This Limited Warranty does not cover products shipped outside of the United States. The warranty registration card must be returned to The Companies within ten (10) days after installation or registered online at www.championindustries.com/warranty-registration for the United States If the online warranty is not sent to The Companies within fifteen (15) days, then the warranty will expire after fifteen (15) months from the date of shipment. The Companies will not assume any responsibility for additional installation costs in any area with jurisdictional problems with local trades or unions. The Companies reserve the right to repair or replace a defective part or the entire machine, if a defect in workmanship or material is identified within the warranty period. Alternatively, The Companies may elect to accept the return of the machine for a full credit. In the event If The Companies elect to repair then the labor and work performed in connection with the warranty shall be done by The Companies' authorized service agent during regular working hours and at regular labor rates. Overtime charges are the responsibility of the equipment purchaser. Warranty travel is be covered up to fifty (50) miles from the authorized service technician's servicing office. If travel exceeds fifty (50) miles, the end user will be responsible for any additional travel expense. Service calls initiated under warranty and found not to contain any defects in materials or workmanship, will not be covered by The Companies warranty. Defective parts become the property of The Companies. Use of non-OEM replacement parts, not authorized by The Companies, will relieve The Companies of all further liability in connection with its warranty. In no event, will The Companies' warranty obligation exceed the charge for the machine. Machines that come with a factory-paid start-up will be limited to one (1) authorized service call for start-up. Installation problems or delays, of any kind, will not be covered by The Companies' warranty and will be the sole responsibility of the equipment purchaser.

### THE WARRANTY DOES NOT COVER:

a. Chemical tubing,, O-rings, or curtains.

b. Vacuum breakers.

c. Adjustments to structural or mechanical components covered by recommended maintenance procedures.

d. Replacement of fuses, resetting of overload breakers, or high-limit thermostats.

e. Adjustments of thermostats or other temperature controlling devices.

f. Adjustments of clutches.

g. Adjustments of water pressure(s).

h. Adjustments of factory chemical pumps and settings.

i. Opening or closing of utility supply valves or switching of electrical supply current.

j. Cleaning of valves, strainers, screens, nozzles, or spray pipes.

k. Regular maintenance and cleaning as outlined in the operator's guide.

l. Damages resulting from water conditions, accidents, alterations, improper use, abuse, tampering, improper installation, under or over voltage conditions, power surges, inadequate wiring, outdoor use, or failure to follow maintenance and operation procedures.

m. Pulper cutter blocks, pulse vanes, and auger brush due to wear and tear.

n. Damages due to improper storage.

o. Special installations or applications, including remote locations, are limited in coverage by this warranty.

p. Any installation that requires additional work and/or travel to gain access to a machine for service is the sole responsibility of the equipment purchaser.

### THE FOLLOWING DEFECTS ARE NOT COVERED BY THE WARRANTY:

1. Damage to the exterior or interior finish.
2. Damage caused by improper connection to utility service other than that designated on the rating plate.
3. Inadequate or excessive water pressure.
4. Corrosion due to foreign materials, improper water supplies, improper chemicals, or chemicals dispensed in excess of recommended concentrations.
5. Failure of components due to the connection of third-party chemical dispensing equipment installed by others.
6. Leaks and damage due to the use of non-specified water quality.
7. Leaks and damage caused by the installer, including machine table connections.
8. Leaks or damage caused by chemical dispensing equipment connections installed by others.
9. Failure to comply with all local building codes.
10. Damage caused by labor dispute.

**WARRANTY OF PARTS:** The Companies warrant all new machine parts produced or authorized by The Companies to be free from defects in material and workmanship for a period of ninety (90) days from the date of invoice. If any parts defect in material and workmanship is found to exist within the warranty period, then The Companies will refund the cost of the defective part.

**DISCLAIMER OF WARRANTIES AND LIMITATIONS OF LIABILITY.** THE COMPANIES' WARRANTY IS ONLY TO THE EXTENT REFLECTED ABOVE. THE COMPANIES MAKE NO OTHER WARRANTIES, EXPRESS OR IMPLIED, INCLUDING, BUT NOT LIMITED TO ANY WARRANTY OF MERCHANTABILITY OR FITNESS OF PURPOSE. THE COMPANIES SHALL NOT BE LIABLE FOR INCIDENTAL OR CONSEQUENTIAL DAMAGES. THE REMEDIES SET OUT ABOVE ARE THE EXCLUSIVE REMEDIES FOR ANY DEFECTS FOUND TO EXIST IN MACHINES AND PARTS OF THE COMPANIES. ALL OTHER REMEDIES ARE EXCLUDED, INCLUDING ANY LIABILITY FOR INCIDENTALS OR CONSEQUENTIAL DAMAGES.

*Champion Industries or Bi-Line Systems does not authorize any other person, including persons who deal in Champion Industries or Bi-Line Systems machines, to change this warranty or create any other obligation in connection with Champion Industries or Bi-Line Systems machines.*

# Service Replacement Parts


| ILLUSTRATION | PAGE |
|---|---|
| Wash Pump/Motor | 2 |
| Booster | 4 |
| Heat Recovery Coil | 6 |
| Heat Recovery Cover | 8 |
| Fill Piping | 10 |
| Rinse Manifold | 12 |
| Wash Manifold - DH6000T | 14 |
| Wash Manifold - DH6000 | 16 |
| Hoses | 18 |
| Spray Arms | 20 |
| Panels and HMI | 22 |
| Dish Rack Tracks | 24 |
| Hood and Handle - DH6000T | 26 |
| Hood and Handle - DH6000 | 28 |
| Door Lock | 30 |
| Back Support and Guides - DH6000T | 32 |
| Bask Support and Guides - DH6000 | 34 |
| Control Panel | 36 |
| Chemical Dispensing Pumps | 38 |
| Wash Tank | 40 |
| Dish Racks | 42 |

**Wash Pump/Motor**

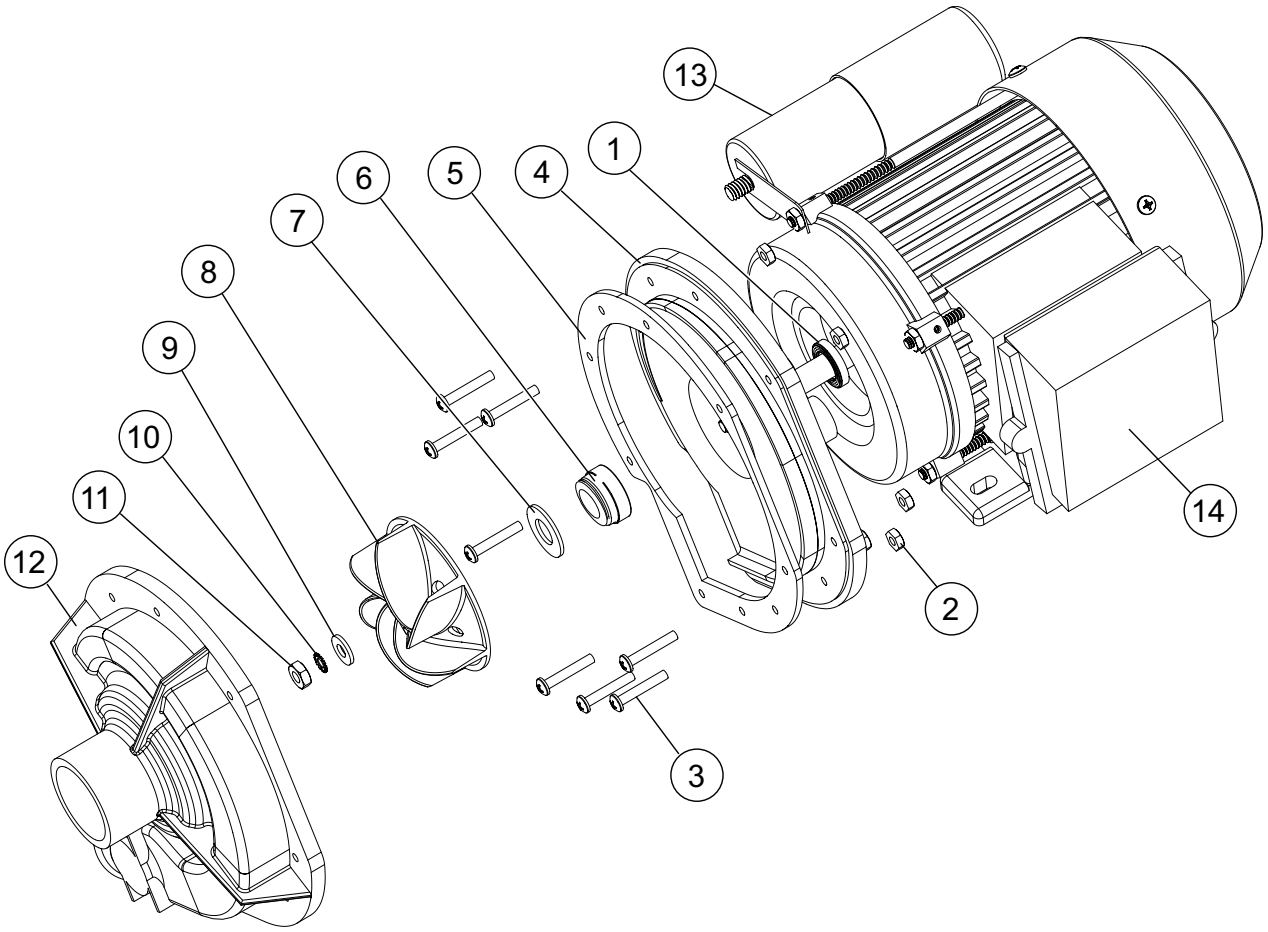

| Item No. | Part No. | Description | Qty. |
|---|---|---|---|
| 1 | 114134 | SLINGER, WATER | 1 |
| 2 | 107337 | NUT, PLAIN M4 | 9 |
| 3 | 0512340 | SCREW, M4 X 0.70 30 mm PHILLIPS PAN HEAD | 9 |
| 4 | 114137 | PLATE, BACKING, C/W CAPACITOR BRKT. | 1 |
| 5 | 110285 | GASKET, PUMP | 1 |
| 6 | 114139 | SEAL, PUMP | 1 |
| 7 | 114140 | WASHER | 1 |
| 8 | 114141 | IMPELLER | 1 |
| 9 | 114142 | WASHER | 1 |
| 10 | 114143 | WASHER, LOCK | 1 |
| 11 | 114144 | NUT, IMPELLER (LH THREADS) | 1 |
| 12 | 114145 | HOUSING, PUMP | 1 |
| 13 | 112637 | CAPACITOR 31.5µF | 1 |
| 14 | 115143 | 1HP PUMP/2HP MOTOR ASSEMBLY COMPLETE 208-240VAC/60/1PH | A/R |
| --- | 115144 | 1HP PUMP/2HP MOTOR ASSEMBLY COMPLETE 208-266/360-460VAC/60/3PH | A/R |
| -- | 115429 | 1HP PUMP/2HP MOTOR ASSEMBLY COMPLETE 230V/50/1PH (For 380-415V/50/3 machines) | A/R |

**THE MOTOR CANNOT BE ORDERED SEPARATELY.**

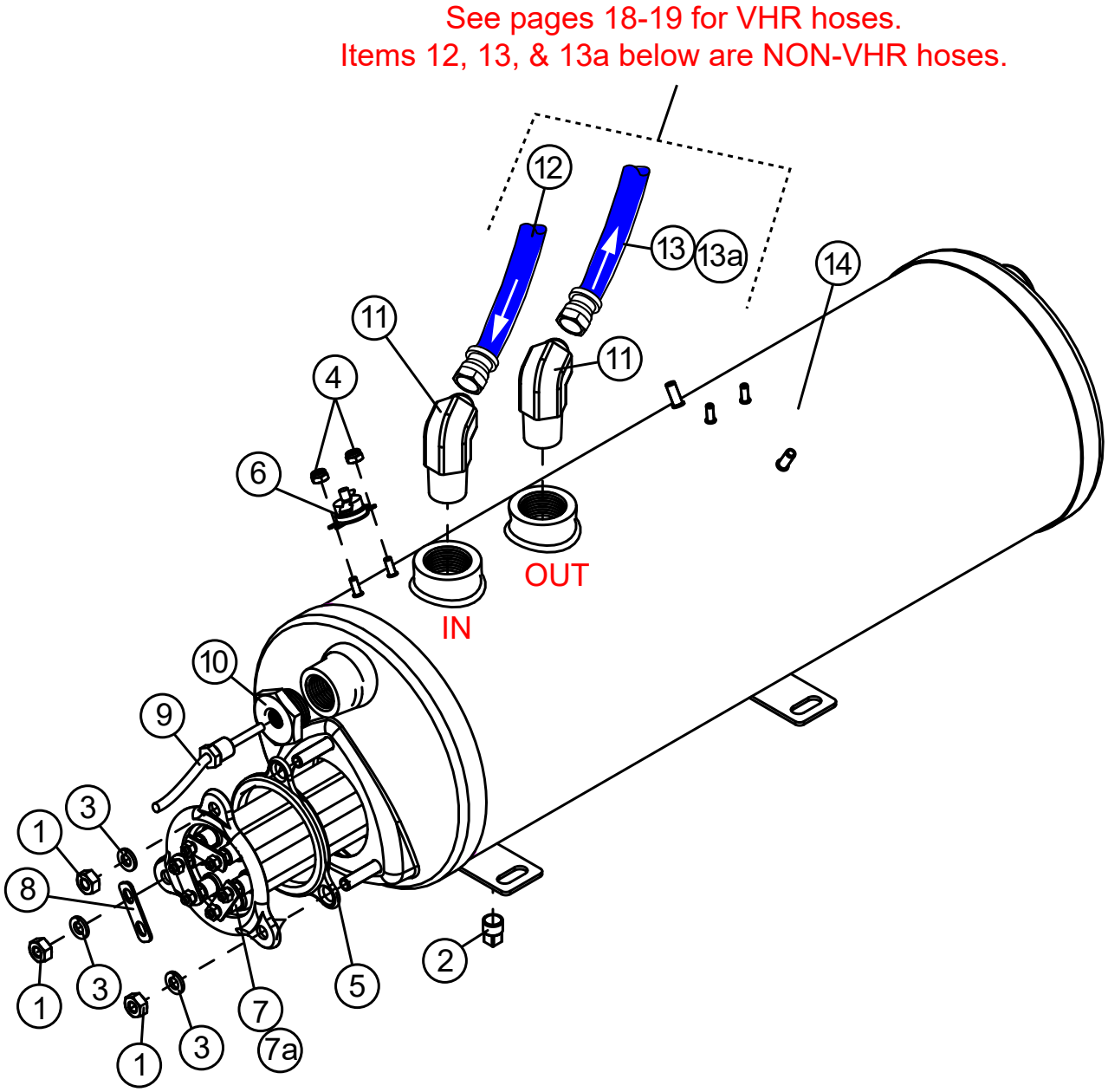
See pages 18-19 for VHR hoses.
Items 12, 13, & 13a below are NON-VHR hoses.
12
13
13a
14
11
11
4
6
OUT
IN
10
9
3
1
8
3
1
5
2
7
7a
3
1

| Item No. | Part No. | Description | Qty. |
|---|---|---|---|
| 1 | 100003 | NUT, PLAIN, 1/4-20 SST | 6 |
| 2 | 100210 | PLUG, 1/8" NPT SQ. HEAD, SST | 1 |
| 3 | 106482 | WASHER, LOCK 1/4" SPLIT SST | 6 |
| 4 | 108954 | NUT, GRIP, 6-32 W/NYLON INSERT SST | 2 |
| 5 | 109985 | SEAL, ELECTRIC HEATER FLANGE | 1 |
| 6 | 113604 | THERMOSTAT, FIXED, SNAP, 212ºF | 1 |
| 7 | 111233 | HEATER, 7.5KW, 208-240V/60/1PH & 3PH | 1 |
| 7a | 108579 | HEATER, 9KW, 480V/60/3PH | 1 |
| 8 | 111488 | JUMPER, STRIP HEATER (Same as 0508960) | 1 |
| 9 | 117454 | RTD TEMPERATURE SENSOR, 100Ω, 1" PROBE | 1 |
| 10 | 115530 | ADAPTER, THERMOMETER DIGITAL (Alt to 0512299) | 1 |
| 11 | 117040 | ELBOW , MALE 3/4 NPT, X 5/8" 37° FLARE JIC, BRASS | 2 |
| 12* | 421823 | HOSE ASSY, 19" LG., INLET SUPPLY TO BOOSTER | 1 |
| 13* | 421018 | HOSE, BOOSTER TO MANIFOLD, BLUE, (DH6000) | 1 |
| 13a* | 421004 | HOSE, BOOSTER TO MANIFOLD, BLUE, (DH6000T) | 1 |
| 14 | 0509042 | BOOSTER TANK, WELDED ASSEMBLY | 1 |

* Items 12, 13, & 13a for NON-VHR machines. See pages 18-19 for VHR hoses.

See pages 14-17 for final rinse hoses for NON-VHR and VHR hoses.

## Heat Recovery Coil

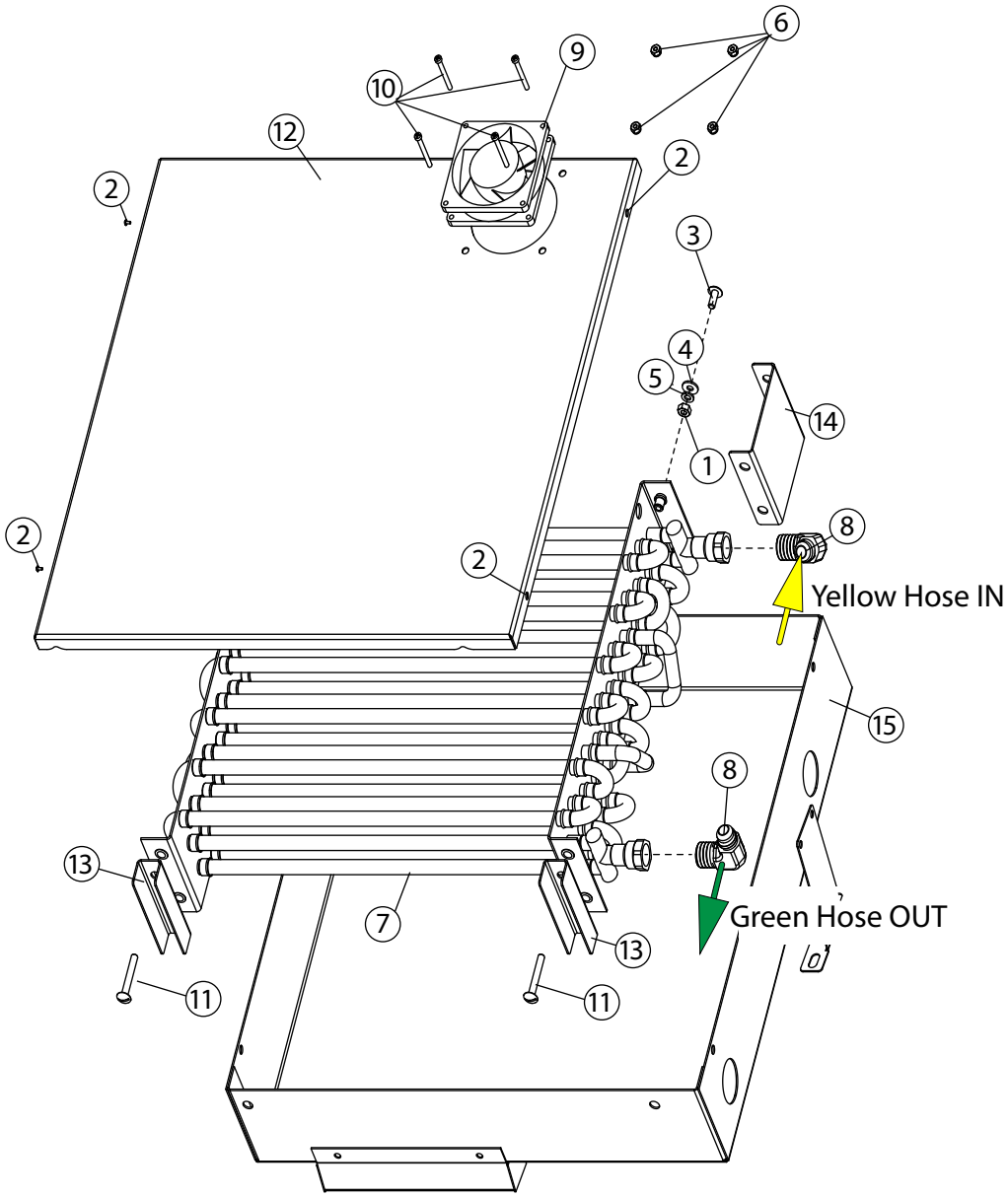

| Item No. | Part No. | Description | Qty. |
|---|---|---|---|
| 1 | 100003 | NUT, HEX PLAIN, 1/4-20 SST | 2 |
| 2 | 100007 | SCREW, TRUSS HD., 10-32" X 3/8" SST | 4 |
| 3 | 100779 | SCREW, TRUSS HD., 1/4-20 X 5/8" TRUSS HEAD SST | 4 |
| 4 | 106026 | WASHER, FLAT, 1/4" | 2 |
| 5 | 106482 | WASHER, LOCK 1/4 SPLIT SST | 2 |
| 6 | 107965 | NUT, GRIP 8-32 SST W/NYLON INSERT | 4 |
| 7 | 114931 | COIL, BATTERY, CONDENSATE REMOVAL | 1 |
| 8 | 115100 | ELBOW, MALE 1/2 NPT X 1/2", 37° FLARE JIC | 2 |
| 9 | 116783 | FAN, NMB 24VDC, 92MM X 92MM, 91.8 CFM | 1 |
| 10 | 116805 | SCREW, FILISTER HEAD, 8-32 X 1-1/2" SST | 4 |
| 11 | 117013 | SCREW, TRUSS HEAD 1/4-20 X 1-3/4" SST | 2 |
| 12 | 338679 | COVER, TOP COIL | 1 |
| 13 | 338764 | COIL SPACER, SHORT | 2 |
| 14 | 338765 | COIL SPACER, LONG | 2 |
| 15 | 339276 | BOX, COIL WELDMENT | 1 |
| --- | 338730 | BEAUTY PANEL, TOP (NOT SHOWN) | 1 |
| --- | 116688 | BUSHING, SNAP-IN SMOOTH BORE 1/2" DIA. (NOT SHOWN) | 1 |
| --- | 338791 | PANEL, BEAUTY, REAR CROSS BAR ASSY. (NOT SHOWN) | 1 |

Heat Recovery Cover

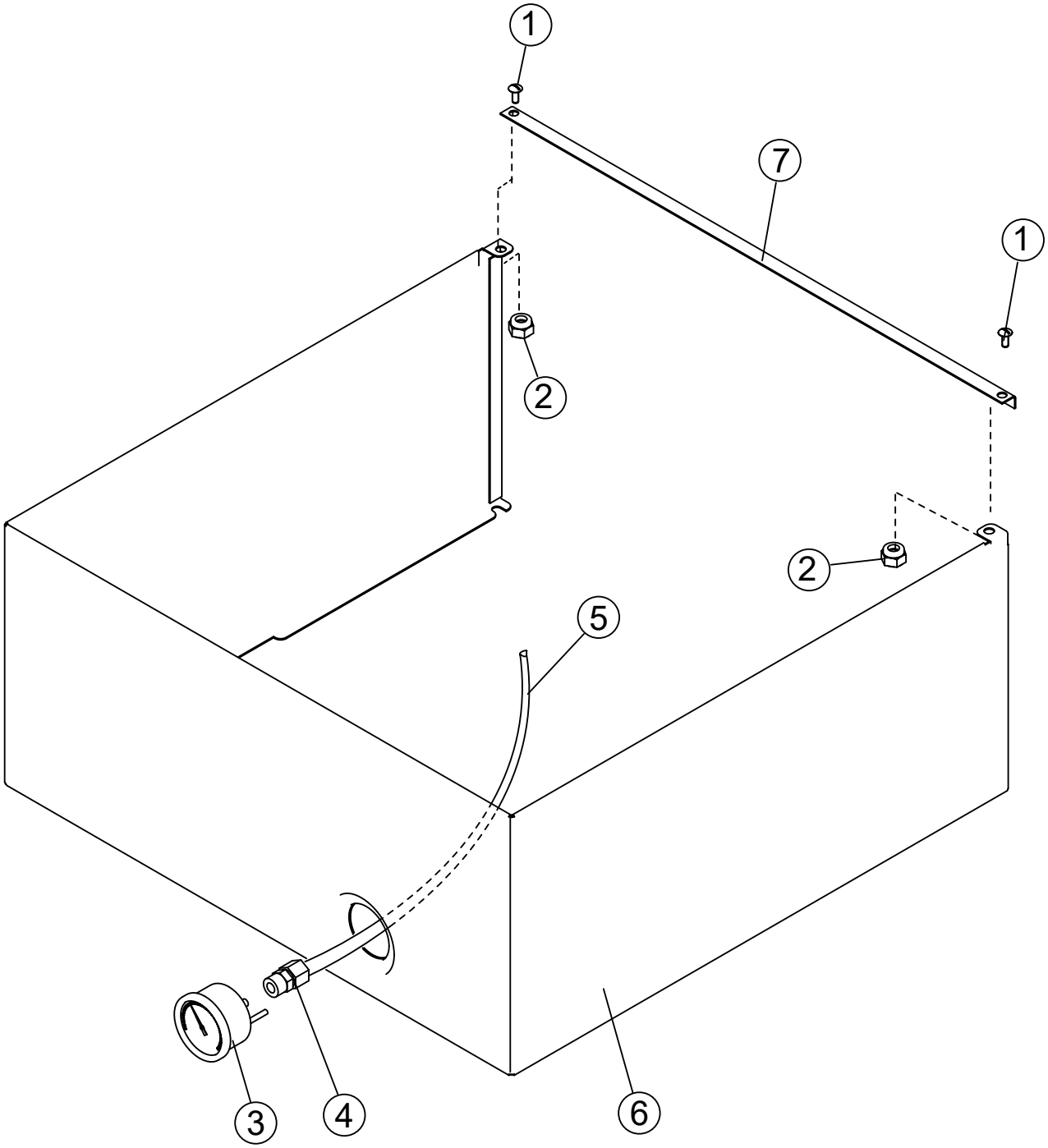

| Item No. | Part No. | Description | Qty. |
|---|---|---|---|
| 1 | 100097 | SCREW, TRUSS HEAD, 10-32 X 1/2" SST | 2 |
| 2 | 107967 | NUT, GRIP 1/4-20 W/NYLON INSERT SST | 6 |
| 3 | 109812 | GAUGE-PRESSURE, 0-60 PSI, PANEL | 1 |
| 4 | 117007 | ADAPTER, 1/4" O.D. X 1/4" MPT PLASTIC, ENDRIES | 1 |
| 5 | 107414 | TUBING, HIGH DENSITY | 8FT. |
| 6 | 338730 | DH6000T, VHR, TOP BEAUTY PANEL | 1 |
| 7 | 338790 | DH6000T, VHR, BEAUTY PANEL, REAR CROSS BAR | 1 |

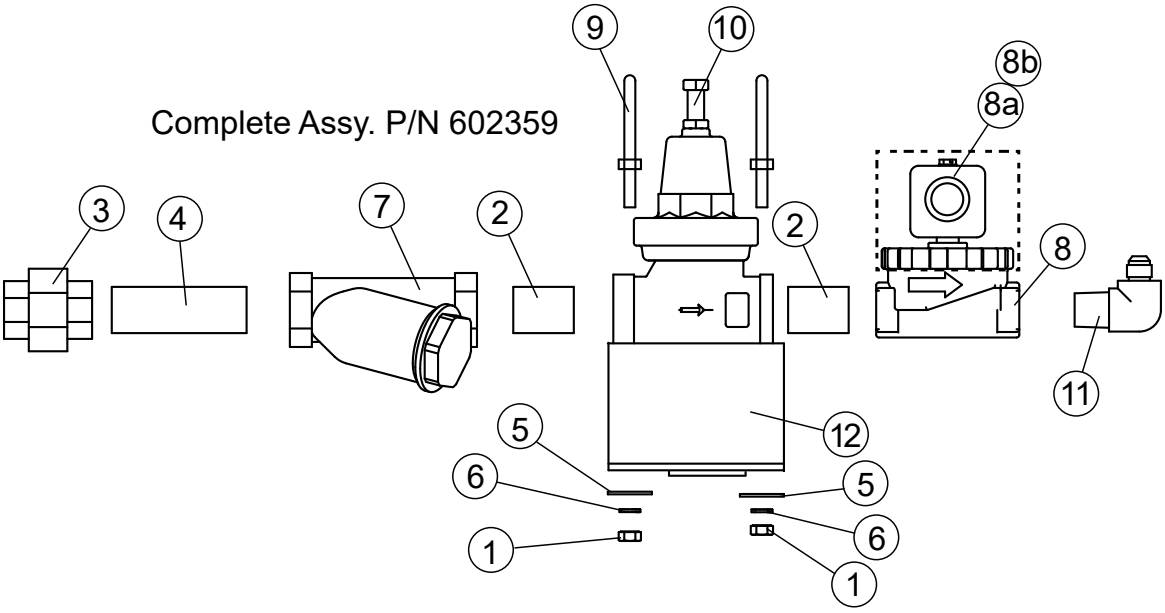
Complete Assy. P/N 602359
9
10
8b
8a
3
4
7
2
2
8
11
5
12
6
5
6
1
1

| Item No. | Part No. | Description | Qty. |
|---|---|---|---|
| 1 | 100003 | NUT, HEX PLAIN, 1/4-20 SST | 4 |
| 2 | 100184 | NIPPLE, 3/4" NPT X CLOSE BRASS | 2 |
| 3 | 100571 | UNION, 3/4" NPT BRASS | 1 |
| 4 | 100184 | NIPPLE, CLOSE, 3/4" NPT BRASS | 1 |
| 5 | 104925 | WASHER, FLAT 1/4" | 4 |
| 6 | 106482 | WASHER, LOCK 1/4" SPLIT SST | 4 |
| 7 | 110768 | STRAINER, LINE 3/4" NPT BRONZE FEMALE | 1 |
| 8 | 111437 | VALVE, SOLENOID, 3/4" NPT HW | 1 |
| 8a | 114839 | KIT, REPAIR, VALVE 3/4" HW | A/R |
| 8b | 111472 | COIL, SOLENOID 3/4" 120VAC | A/R |
| 9 | 115169 | U-BOLT, 1/4-20 X 1-3/8" L THD., X 1-1/2" OD | 2 |
| 10 | 116945 | VALVE, PRV 25-75 PSI 3/4" NPT | 1 |
| 11 | 117040 | ELBOW, MALE 3/4" NPT X 5/8" 37° FLARE JIC BRASS | 1 |
| 12 | 340542 | BRACKET, INLET PLUMBING SUPPLY | 1 |

**Rinse Manifold**

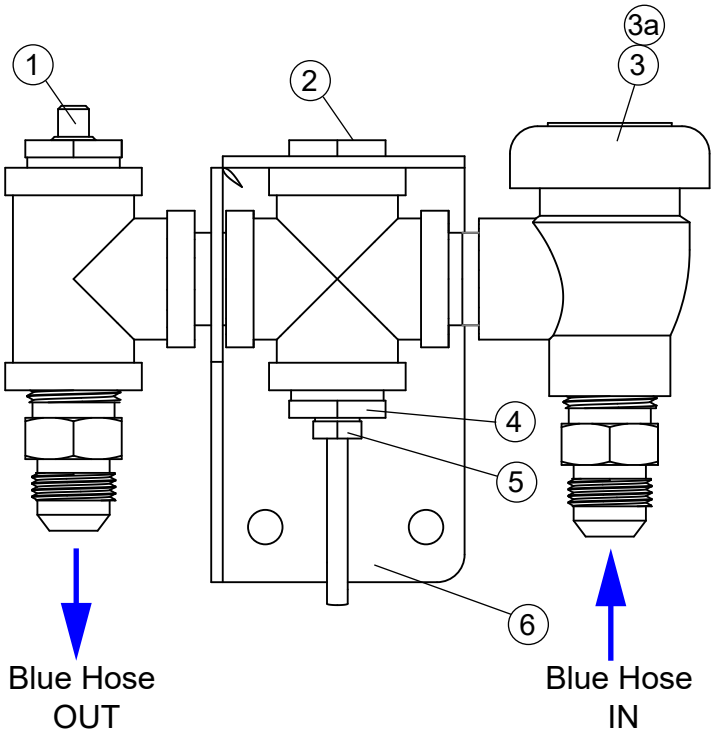


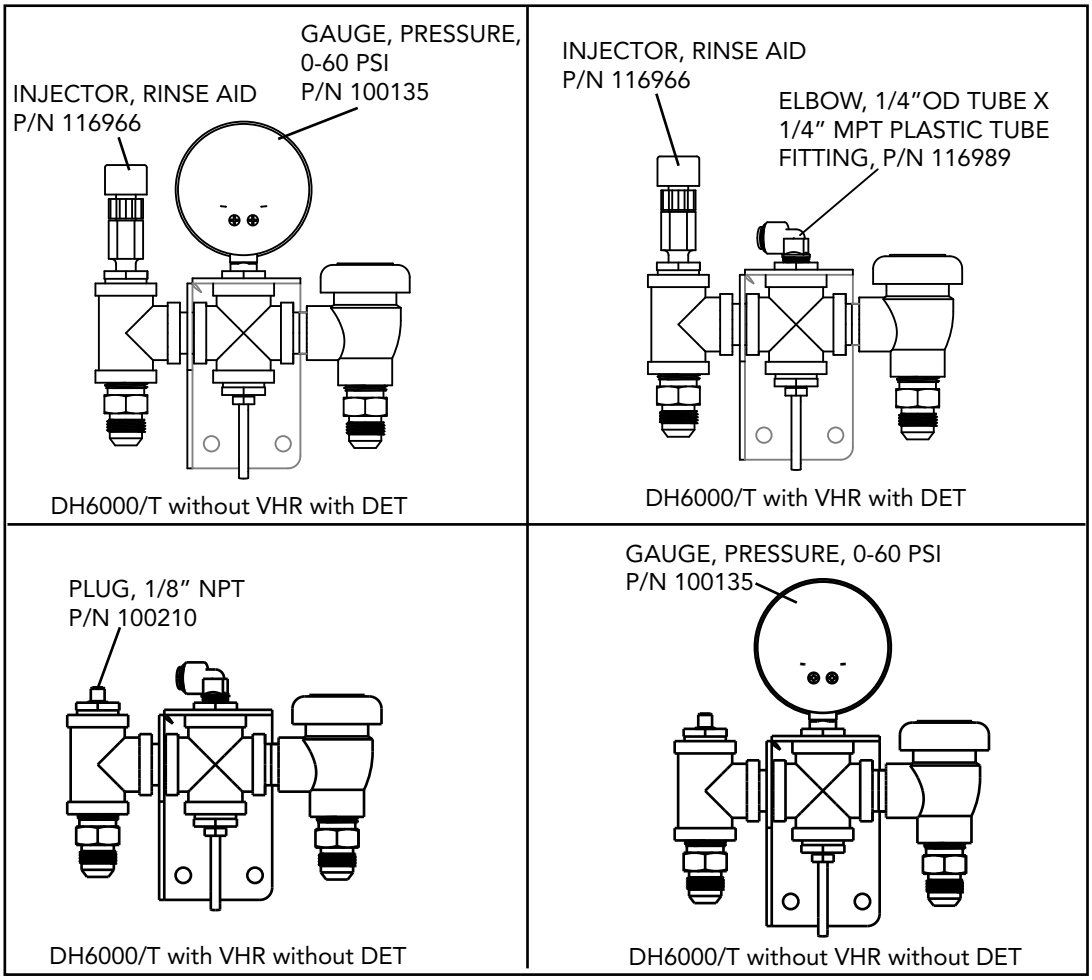

| Item No. | Part No. | Description | Qty. |
|---|---|---|---|
| 1 | 100210 | PLUG, 1/8" SQ. HEAD SST | 1 |
| 2 | 102388 | BUSHING, REDUCING 1/2" NPT X 1/4" NPT BRASS | 1 |
| 3 | 100500 | BREAKER, VACUUM 1/2" BRONZE | 1 |
| 3a | 900836 | KIT, REPAIR, VACUUM BREAKER | A/R |
| 4 | 114717 | BUSHING, REDUCING 1/2" NPT X 1/8" NPT SST | 1 |
| 5 | 117454 | RTD TEMPERATURE SENSOR, 100Ω, 1" PROBE | 1 |
| 6 | 339057 | BRACKET, RINSE PLUMBING | 1 |

**Wash Manifold - DH6000T (Non-VHR and VHR)**

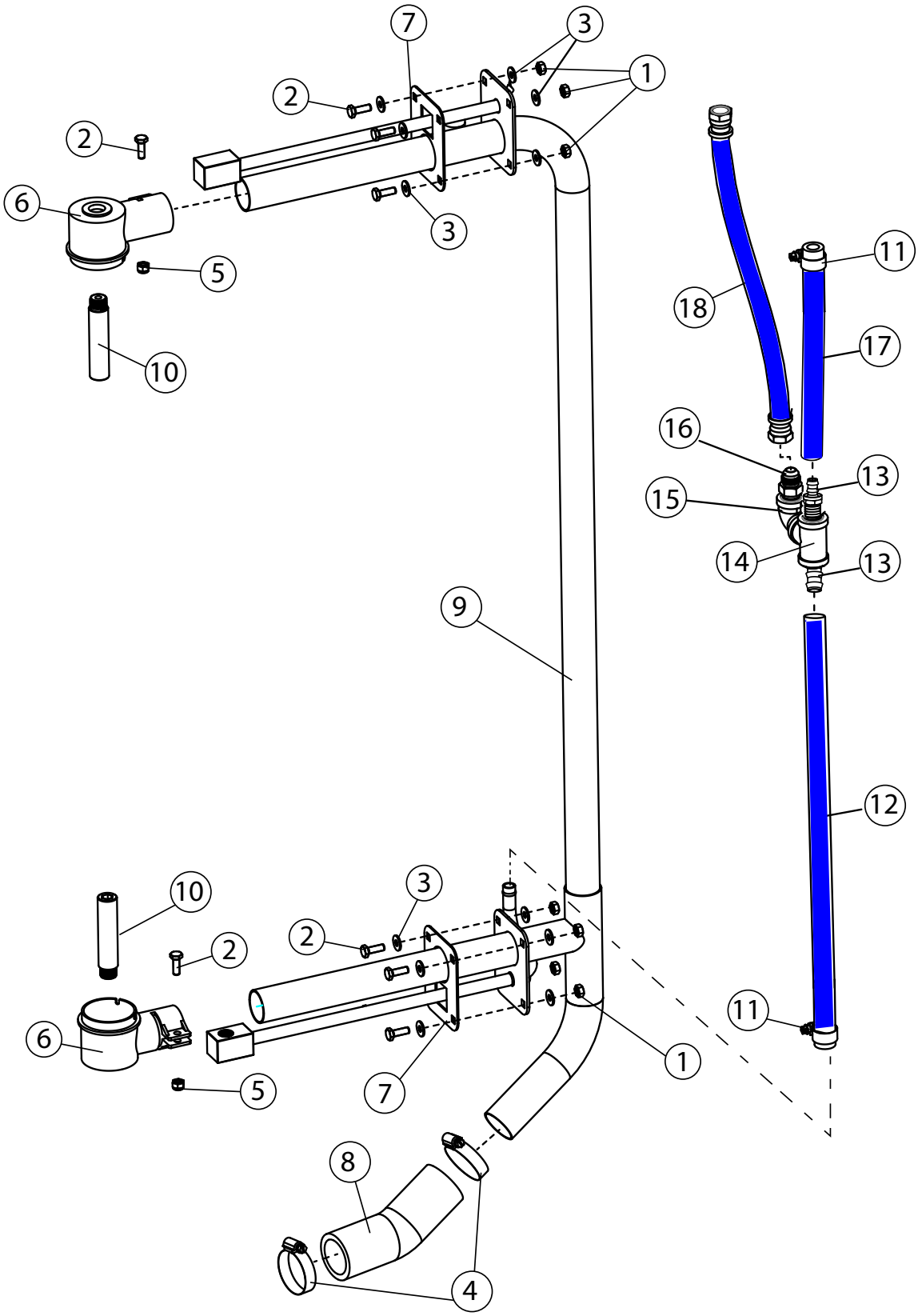

| Item No. | Part No. | Description | Qty. |
|---|---|---|---|
| 1 | 107967 | NUT GRIP, 1/4-20 W NYLON INSERT SST | 8 |
| 2 | 100736 | BOLT, 1/4-20 X 3/4", HEX HD., SST | 10 |
| 3 | 106026 | WASHER, FLAT 1/4" SST | 12 |
| 4 | 107340 | CLAMP, HOSE M28 W/CS SCREW | 2 |
| 5 | 107967 | GRIP NUT, 1/4-20 SST W/NYLON INSERT | 2 |
| 6 | 109864 | SUPPORT, WASH ARM | 2 |
| 7 | 116940 | GASKET, STANDPIPE WASH | 2 |
| 8 | 117215 | HOSE, DISCHARGE, DH6000 | 1 |
| 9 | 338832 | STANDPIPE, WELDMENT, DH6000T | 1 |
| 10 | 0507445 | SPINDLE, WASHARM | 2 |
| 11 | 105994 | CLAMP, HOSE, 1/2"-1-18" W/CS SCREW | 2 |
| 12 | 207164-S | HOSE ASSY. 1/2" ID X 22" LG., BLUE | 1 |
| 13 | 115142 | HOSEBARB, MALE, 1/2"NPT X 1/2" HOSE, BRASS | 1 |
| 14 | 102514 | TEE, 1/2" NPT, BRASS | 1 |
| 15 | 115101 | CONNECTOR, MALE, 1/2" NPT X 1/2 "37º, FLARE JIC | 1 |
| 16 | 102438 | ELBOW, STREET, 1/2" NPT X 90º BRASS | 1 |
| 17 | 207148-S | HOSE ASSY. 1/2" X 12" LG., BLUE | 1 |
| 18 | 419974 | HOSE ASSY. 1/2" ID X 14" LG., BLUE | 1 |

**Wash Manifold - DH6000 (Non-VHR and VHR)**

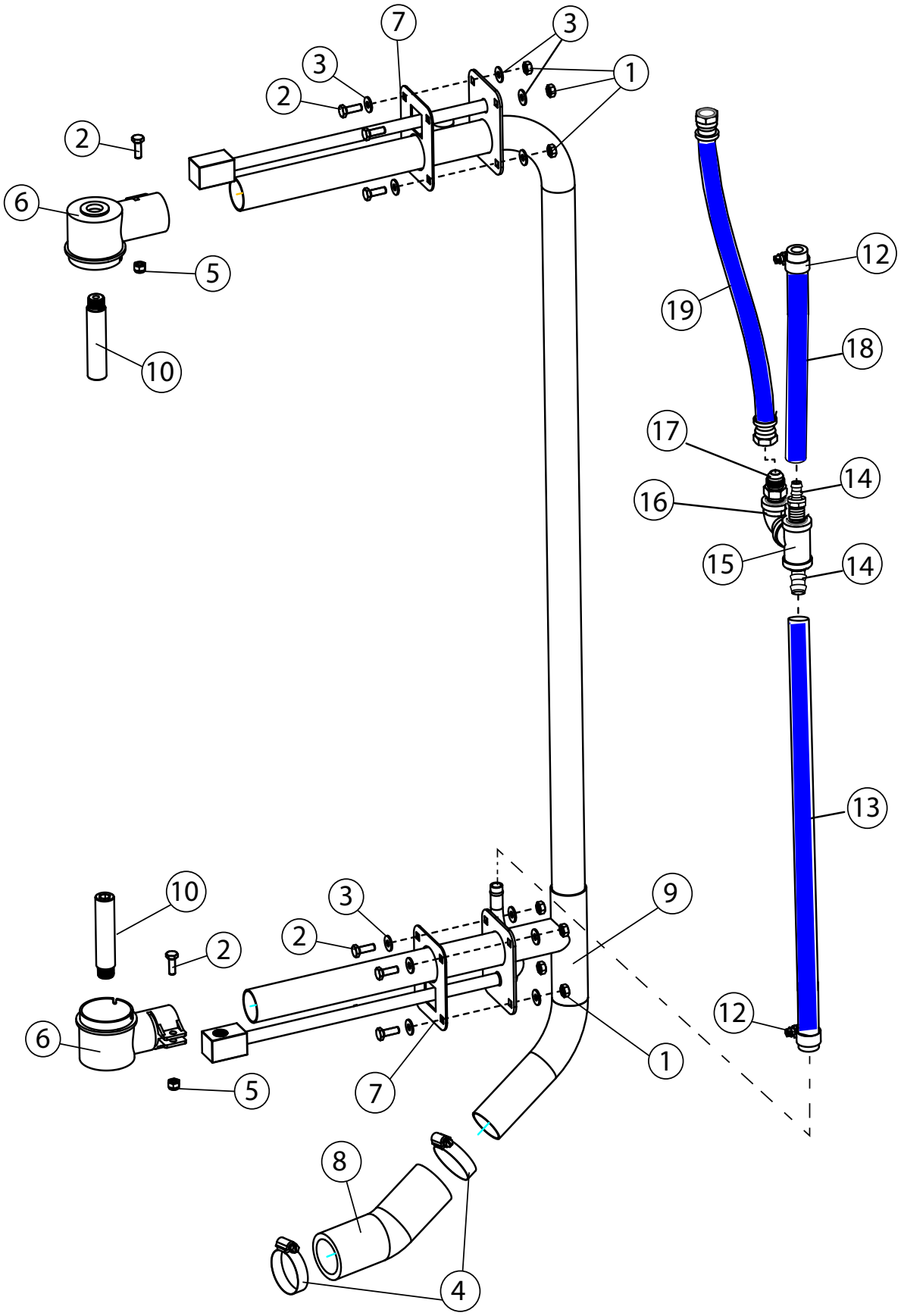

| Item No. | Part No. | Description | Qty. |
|---|---|---|---|
| 1 | 107967 | NUT GRIP, 1/4-20 W/NYLON INSERT SST | 8 |
| 2 | 100736 | BOLT, 1/4-20 X 3/4", HEX HD., SST | 10 |
| 3 | 106026 | WASHER, FLAT 1/4" SST | 12 |
| 4 | 107340 | CLAMP, HOSE M28 W/CS SCREW | 2 |
| 5 | 107967 | GRIP NUT, 1/4-20 SST W/NYLON INSERT | 2 |
| 6 | 109864 | SUPPORT, WASH ARM | 2 |
| 7 | 116940 | GASKET, STANDPIPE WASH | 2 |
| 8 | 117215 | HOSE, DISCHARGE, DH6000 | 1 |
| 9 | 338833 | STANDPIPE, WELDMENT, DH6000 | 1 |
| 10 | 0507445 | SPINDLE, WASHARM | 2 |
| 11 | 602093 | PIPING ASSY., FINAL RINSE | 1 |
| 12 | 105994 | CLAMP, HOSE, 1/2"-1-18" W/CS SCREW | 2 |
| 13 | 207158-S | HOSE, 1/2" ID X 16" LG., BLUE | 1 |
| 14 | 115142 | BARB, HOSE, MALE, 1/2"NPT X 1/2" HOSE, BRASS | 1 |
| 15 | 102514 | TEE, 1/2" NPT, BRASS | 1 |
| 16 | 102438 | ELBOW, STREET, 1/2" NPT X 90º BRASS | 1 |
| 17 | 115101 | CONNECTOR, MALE, 1/2" NPT X 1/2"37º, FLARE JIC | 1 |
| 18 | 207781-S | HOSE, 1/2" ID X 9-1/2" LG., BLUE | 1 |
| 19 | 419325 | HOSE ASSY., 1/2" ID X 11" LG., FLARE JIC | 1 |

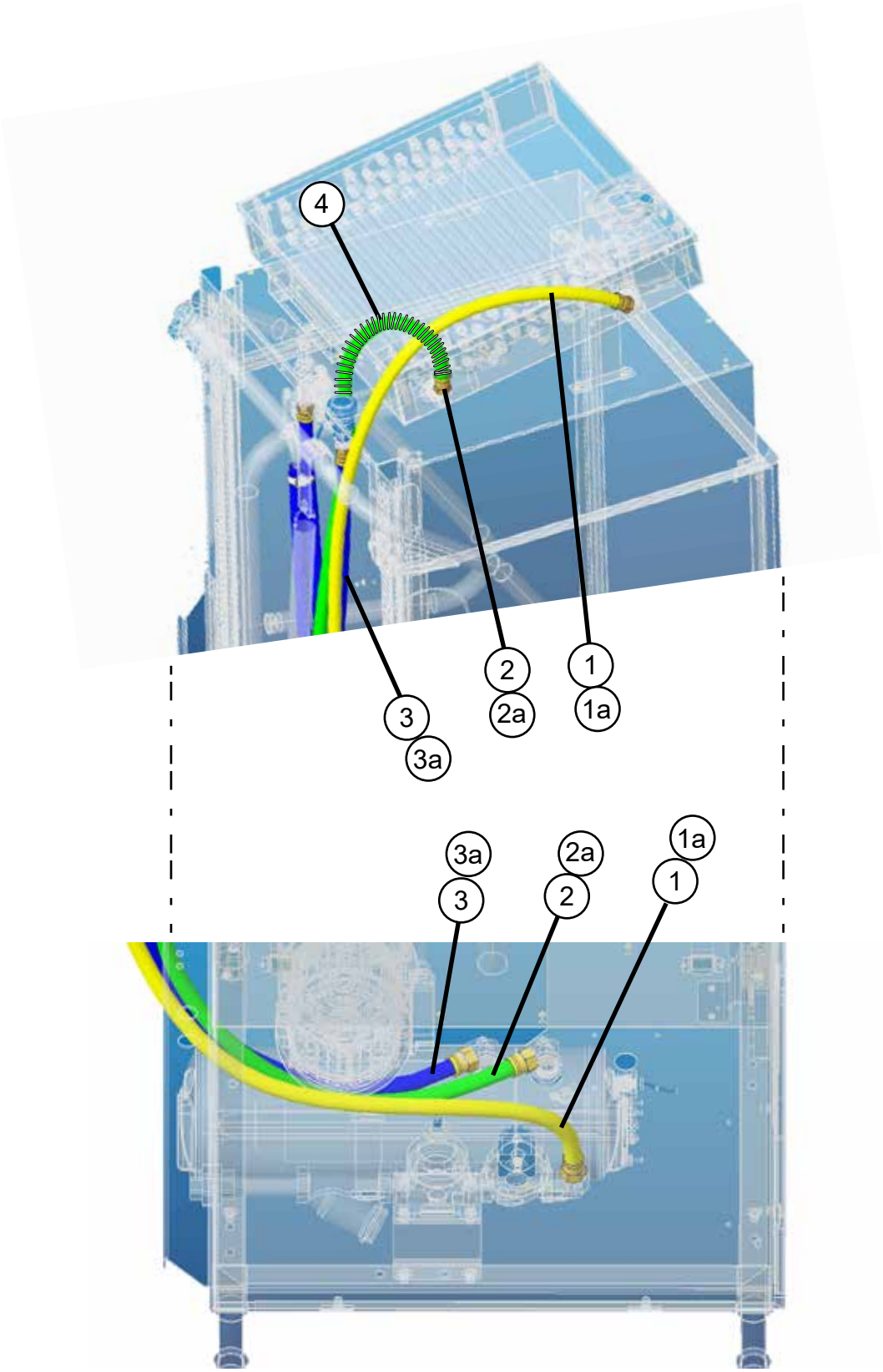
4
2
2a
1
1a
3
3a
3a
3
2a
2
1a
1

| Item No. | Part No. | Description | Qty. |
|---|---|---|---|
| 1 | 421006 | DH6000T HOSE, COLD INLET TO COIL, YELLOW, VHR | 1 |
| 1a | 421020 | DH6000 HOSE, COLD INLET TO COIL, YELLOW, VHR | 1 |
| 2 | 421005 | DH6000T HOSE, COIL INTO BOOSTER, GREEN, VHR | 1 |
| 2a | 421019 | DH6000 HOSE, COIL INTO BOOSTER, GREEN, VHR | 1 |
| 3 | 421004 | DH6000T HOSE, BOOSTER TO MANIFOLD, BLUE | 1 |
| 3a | 421018 | DH6000 HOSE, BOOSTER TO MANIFOLD, BLUE | 1 |
| 4 | 117752 | SPRING, ANTI-KINK, 3/4" O.D. HOSE X 12" LONG | 1 |

## Spray Arms

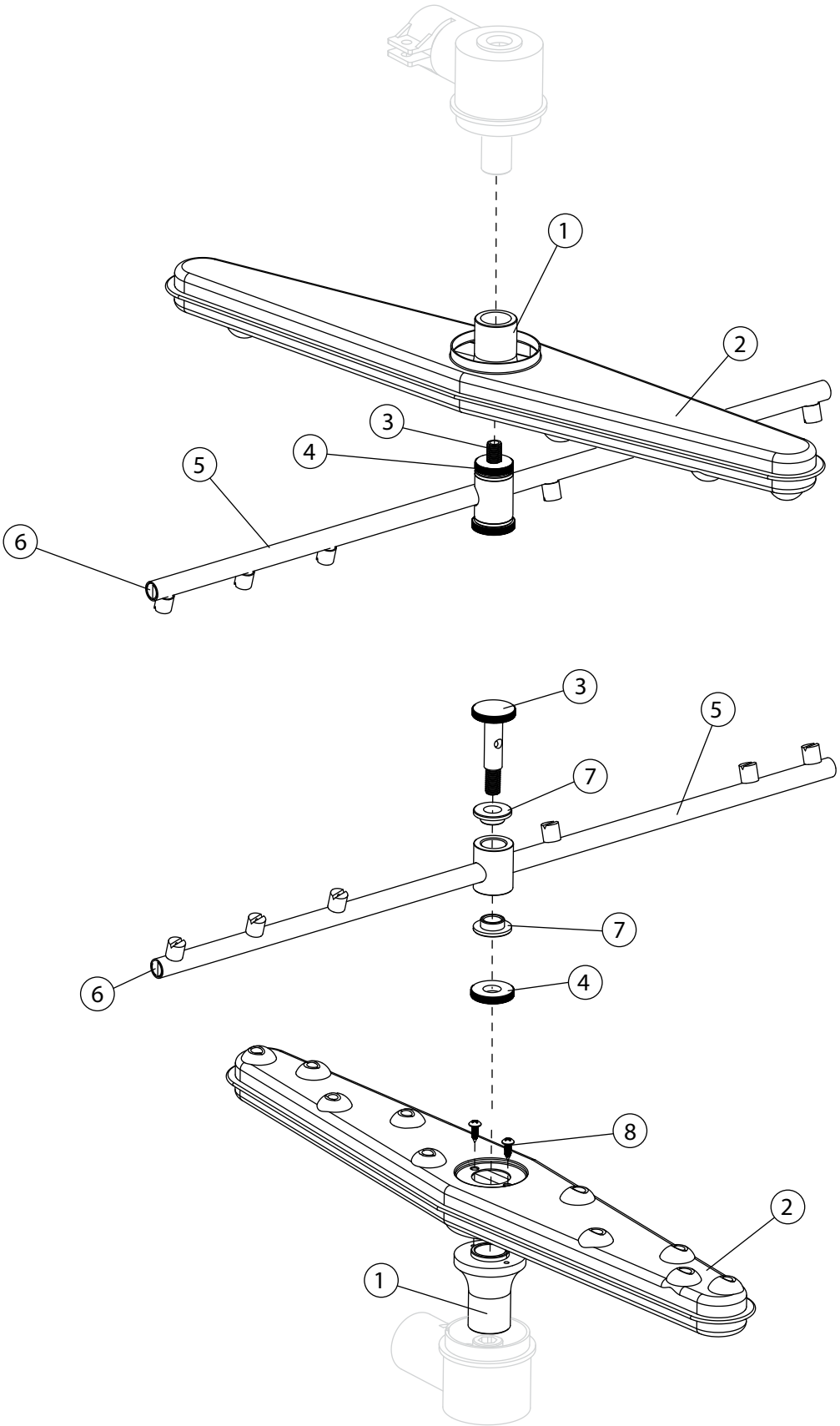

| Item No. | Part No. | Description | Qty. |
|---|---|---|---|
| 1 | 207096 | WASHARM, BEARING | 2 |
| 2 | 114858 | WASHARM, WELDMENT | 2 |
| 3 | 0507443 | SPINDLE, RINSE ARM | 2 |
| 4 | 114556 | NUT, SPINDLE | 2 |
| 5 | 115222 | RINSE ARM, WELDMENT | 2 |
| 6 | 114861 | END CAP, HEADLESS, 7/16-20 SST | 6 |
| 7 | 113514 | BEARING, RINSE ARM | 4 |
| 8 | 109835 | SCREW, #8 X 1/2" SELF-TAPPING PAN HEAD, PHILLIPS | 4 |
| --- | 900975 | RINSE ARM ASSEMBLY, COMPLETE (INCLUDES ITEMS 5-7) | 2 |
| --- | 900954 | WASH ARM ASSEMBLY, COMPLETE (INCLUDES ITEMS 1, 2 and 8) | 2 |

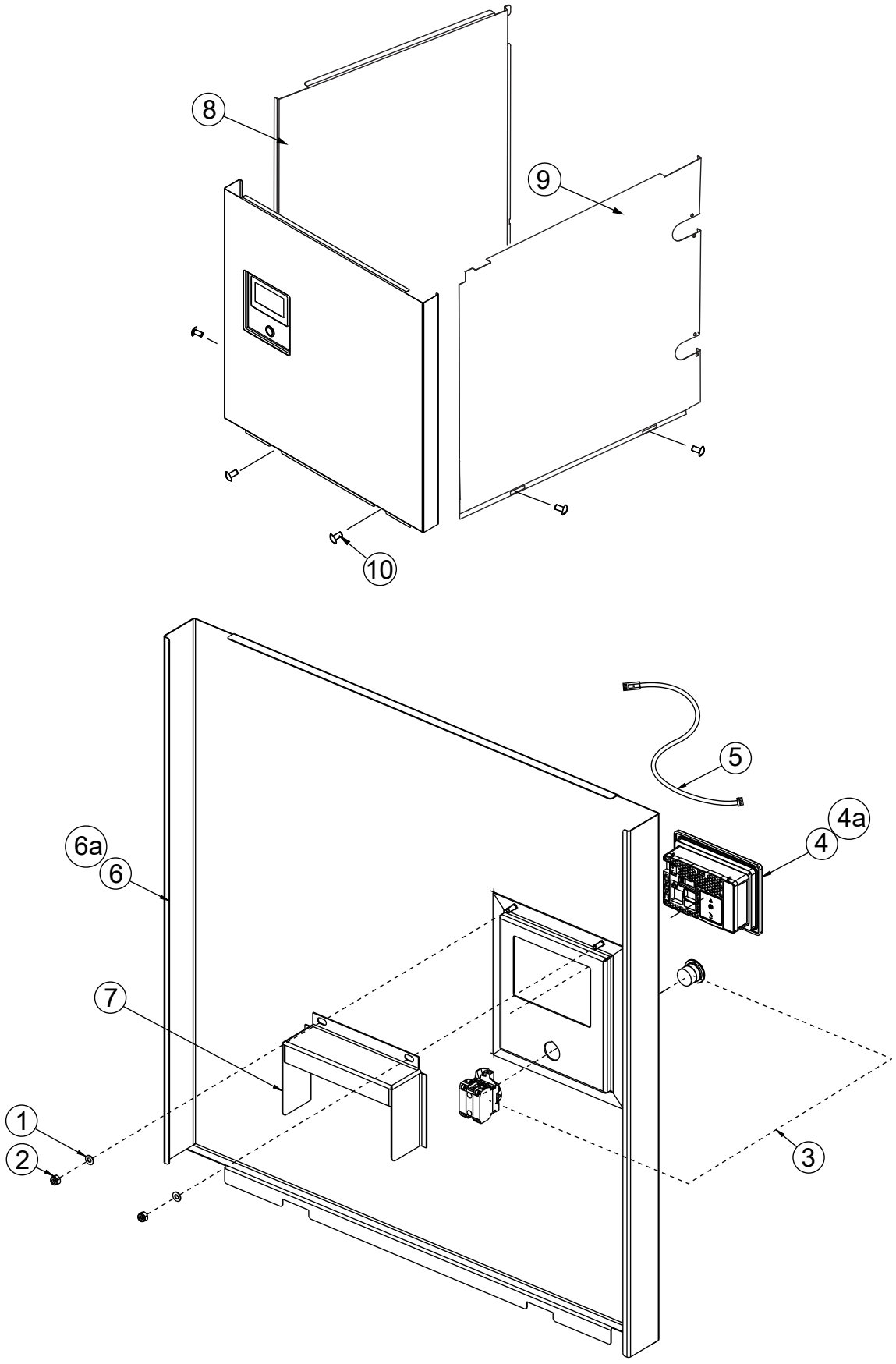
8
9
10
5
4a
4
6a
6
7
1
2
3

| Item No. | Part No. | Description | Qty. |
|---|---|---|---|
| 1 | 107033 | WASHER, FLAT | 2 |
| 2 | 107966 | NUT GRIP, 10-32 X SST, W/NYLON INSERT | 2 |
| 3 | 116852 | PUSH BUTTON, ON/OFF 22MM | 1 |
| 4* | 116889 | SCHNEIDER HMI, (Prior to S/N D230623034) | 1 |
| 4a** | 117543 | WIENTEK HMI, (Beginning with S/N D230623034) | 1 |
| 5 | 116919 | NETWORK CABLE, SCHNEIDER PLC TO HMI | 1 |
| 6* | 330488 | PANEL, FRONT (Use with Item 4 only) | 1 |
| 6a** | 340799 | PANEL, FRONT (Use with Item 4a only) | 1 |
| 7 | 339532 | SHIELD, SPLASH, HMI | 1 |
| 8 | 340479 | PANEL, LEFT-HAND SIDE | 1 |
| 9 | 339004 | PANEL, RIGHT-HAND SIDE | 1 |
| 10 | 100073 | SCREW, 1/4-20 X 1/2", TRUSS HEAD, SST | 6 |
| ---* | 703309 | COMPLETE ASSEMBLY, SCHNEIDER HMI<br>INCLUDES ITEMS: 1, 2, 3, 4, 5, 6 | A/R |
| ---** | 703375 | COMPLETE ASSEMBLY, WEINTEK HMI<br>INCLUDES ITEMS: 1, 2, 3, 4a, 5, 6a | A/R |

## Dish Rack Tracks

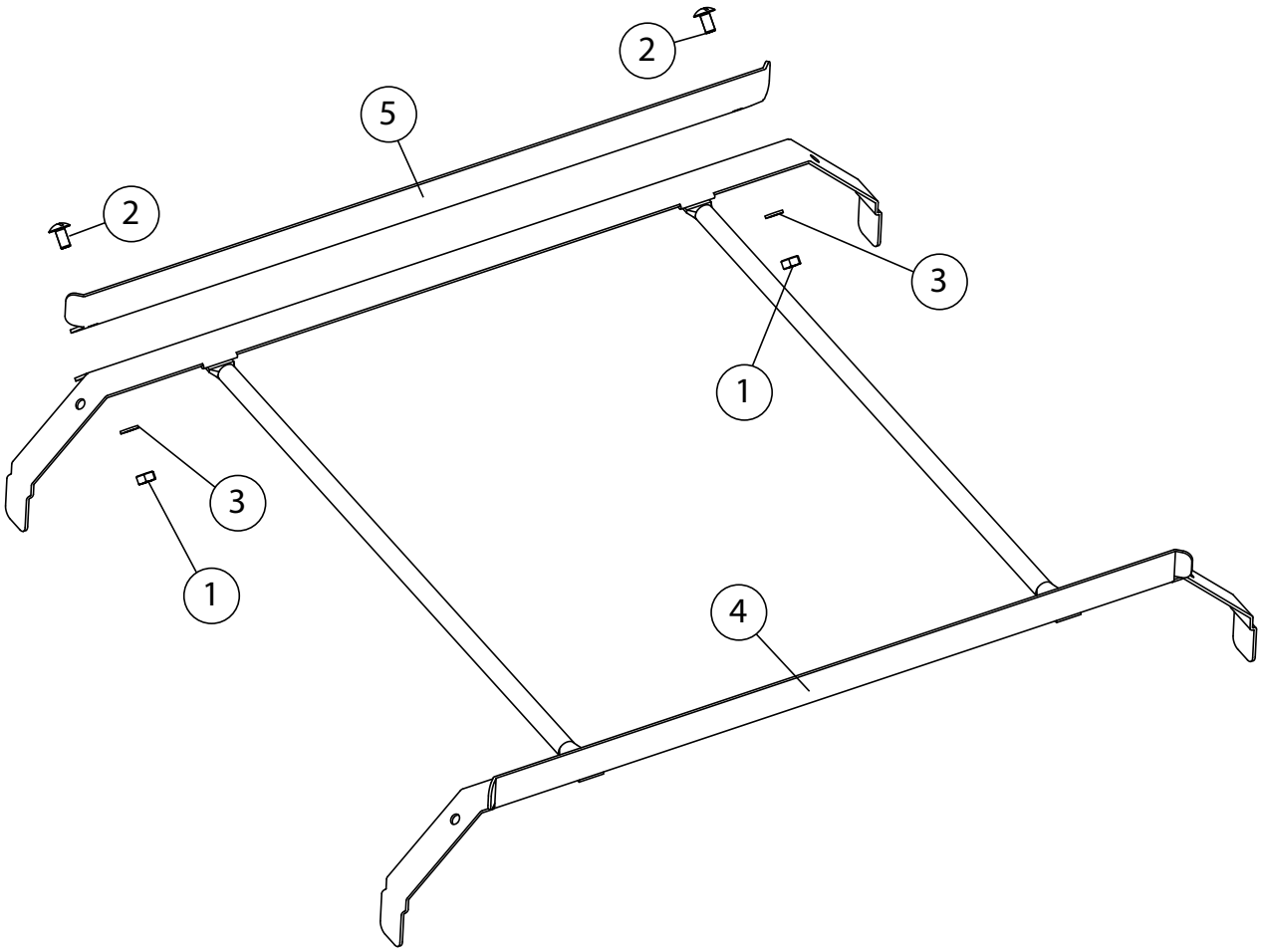

| Item No. | Part No. | Description | Qty. |
|---|---|---|---|
| 1 | 100003 | HEX, PLAIN NUT 1/4-20 | 2 |
| 2 | 100073 | SCREW, 1/4-20 X 1/2", TRUSS HEAD, SST | 2 |
| 3 | 106482 | WASHER, LOCK 1/4" SPLIT SST | 2 |
| 4 | 335780 | TRACK WELDMENT | 1 |
| 5 | 332023 | TRACK, RAIL ADJUST | 1 |

## Hood and Handle - DH6000T

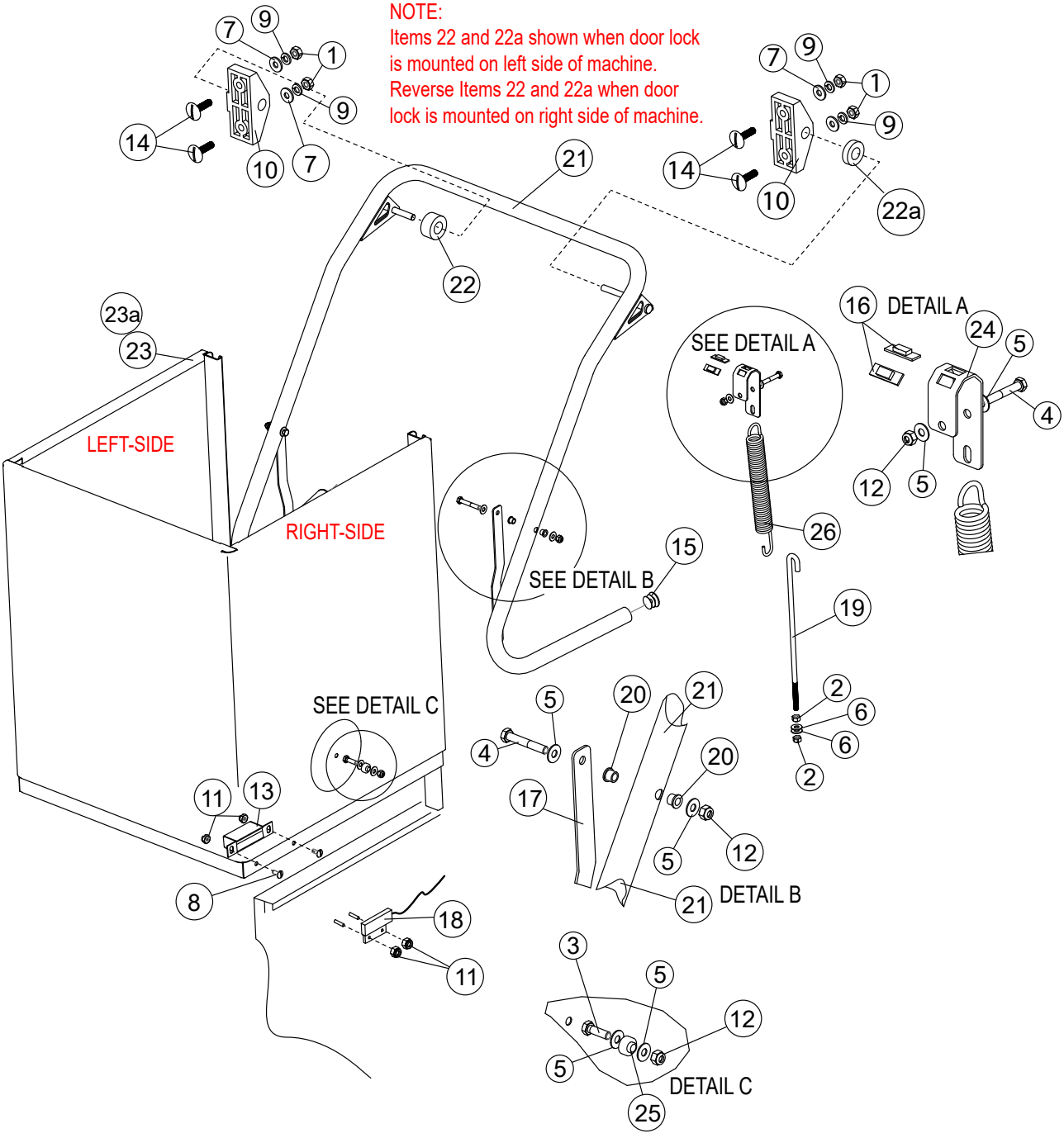

| Item No. | Part No. | Description | Qty. |
|---|---|---|---|
| 1 | 100003 | HEX PLAIN NUT, 1/4-20 SST | 4 |
| 2 | 100140 | HEX PLAIN NUT, 3/8-16 SST | 4 |
| 3 | 100740 | BOLT, HEX HEAD, 5/16-18 X 1" SST | 2 |
| 4 | 100742 | BOLT, HEX HEAD, 5/16-18 X 2" SST | 4 |
| 5 | 102376 | WASHER, FLAT 5/16" SST | 12 |
| 6 | 104618 | WASHER, FLAT 3/8" SST | 4 |
| 7 | 106026 | WASHER, FLAT 1/4" SST | 4 |
| 8 | 106382 | SCREW, TRUSS HEAD 6-32 X 3/8" SST | 2 |
| 9 | 106482 | WASHER, LOCK 1/4" SPLIT SST | 4 |
| 10 | 107399 | SUPPORT, PIVOT BLOCK DOOR HANDLE | 2 |
| 11 | 108954 | NUT GRIP, 6-32 SST W/NYLON INSERT | 4 |
| 12 | 109009 | NUT GRIP, 5/16-18 SST W/NYLON INSERT | 6 |
| 13 | 113937 | MAGNET, ALEPH | 1 |
| 14 | 115286 | SCREW, 1/4-20 X 1" LG FLAT WIDE HEAD | 1 |
| 15 | 115627 | END CAP, LIFT HANDLE | 2 |
| 16 | 115637 | BUSHING, LIFT ARM | 4 |
| 17 | 115641 | LINK, HOOD ARM | 2 |
| 18 | 113721 | SWITCH, REED, DOOR SAFETY | 2 |
| 19 | 116231 | J-BOLT, 3/8-16 X 14" LG | 2 |
| 20 | 116275 | BEARING, FLANGED, SLEEVED BRONZE OIL EMBEDDED | 4 |
| 21 | 116804 | LIFT ARM, WELDMENT | 1 |
| 22 | 117440 | SPACER BUSHING (Installed on door lock side) | 1 |
| 22a | 117441 | SPACER BUSHING (Installed on opposite side of door lock) | 1 |
| 23 | 336125 | HOOD, WELDMENT, CHAMPION (Production Only) | 1 |
| 23a | 336125-S | HOOD, WELDMENT, CHAMPION (For Field Replacement) | 1 |
| 24 | 336434 | BRACKET, SPRING | 2 |
| 25 | 0509264 | BUSHING, SIDE DOOR | 2 |
| 26 | 0510459 | SPRING, DOOR | 2 |

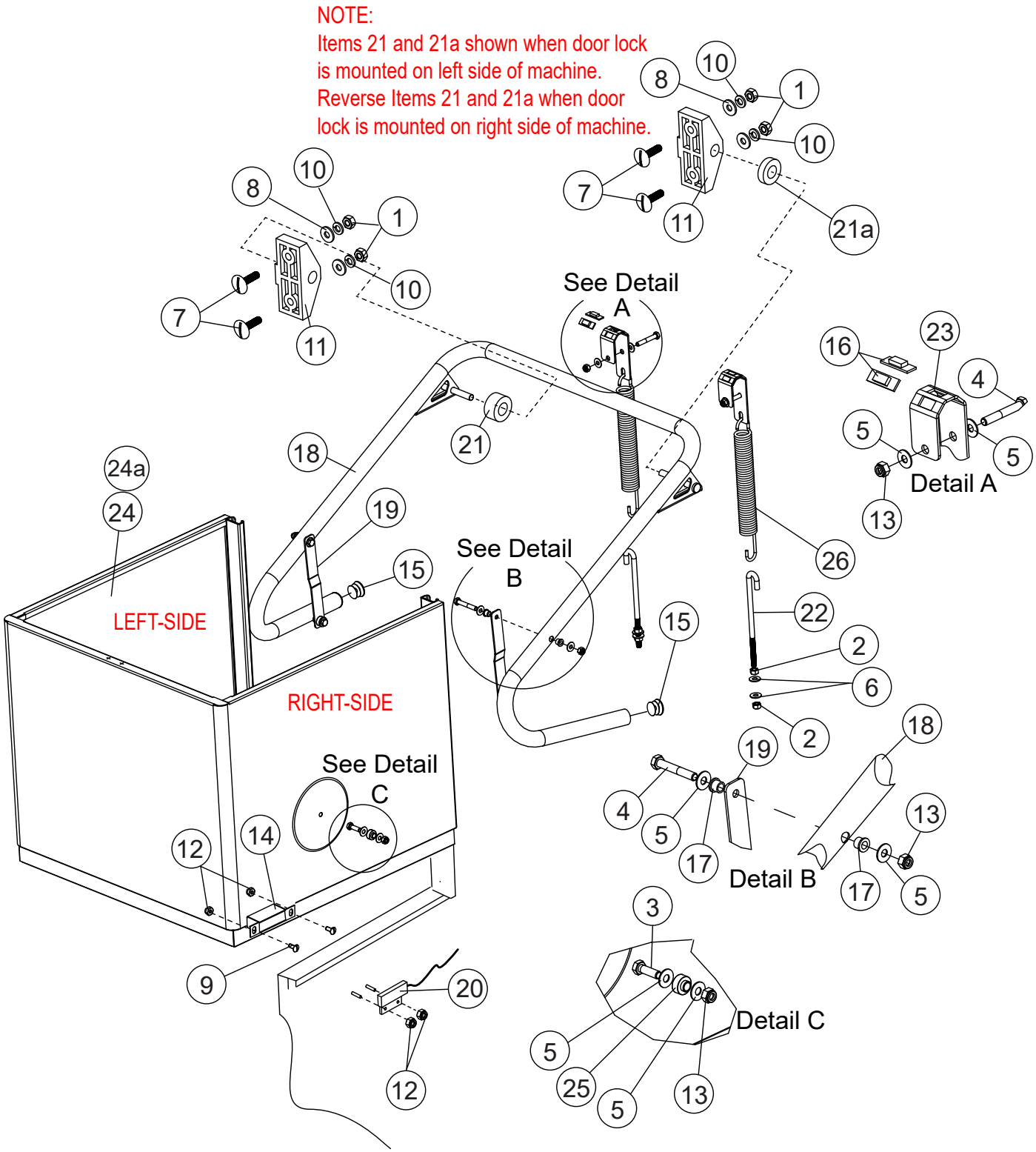
NOTE:
Items 21 and 21a shown when door lock is mounted on left side of machine.
Reverse Items 21 and 21a when door lock is mounted on right side of machine.
See Detail A
See Detail B
See Detail C
Detail A
Detail B
Detail C
LEFT-SIDE
RIGHT-SIDE

| Item No. | Part No. | Description | Qty. |
|---|---|---|---|
| 1 | 100003 | HEX PLAIN NUT, 1/4-20 SST | 4 |
| 2 | 100140 | HEX PLAIN NUT, 3/8-16 SST | 4 |
| 3 | 100740 | BOLT, HEX HEAD, 5/16-18 X 1" SST | 2 |
| 4 | 100742 | BOLT, HEX HEAD, 5/16-18 X 2" SST | 4 |
| 5 | 102376 | WASHER, FLAT 5/16" SST | 12 |
| 6 | 104618 | WASHER, FLAT 3/8" SST | 4 |
| 7 | 105286 | SCREW, TRUSS HEAD 1/4-20 X 1" SST | 4 |
| 8 | 106026 | WASHER, FLAT 1/4" SST | 4 |
| 9 | 106382 | SCREW, TRUSS HEAD 6-32 X 3/8" SST | 2 |
| 10 | 106482 | WASHER, LOCK 1/4" SPLIT SST | 4 |
| 11 | 107399 | SUPPORT, PIVOT BLOCK DOOR HANDLE | 2 |
| 12 | 108954 | NUT GRIP, 6-32 SST W/NYLON INSERT | 4 |
| 13 | 109009 | NUT GRIP, 5/16-18 SST W/NYLON INSERT | 6 |
| 14 | 113937 | MAGNET, ALEPH | 1 |
| 15 | 115627 | END CAP, LIFT HANDLE | 2 |
| 16 | 115637 | BUSHING, LIFT ARM | 4 |
| 17 | 116275 | BEARING, FLANGED, SLEEVED BRONZE OIL EMBEDDED | 4 |
| 18 | 116768 | LIFT ARM, DOOR | 1 |
| 19 | 116772 | LINK ARM, DOOR | 2 |
| 20 | 113721 | SWITCH, REED, DOOR SAFETY | 1 |
| 21 | 117440 | SPACER BUSHING (Installed on door lock side) | 1 |
| 21a | 117441 | SPACER BUSHING (Installed on opposite side of door lock) | 1 |
| 22 | 117064 | J-BOLT, 8" LG., 3/8-16 SST | 2 |
| 23 | 336434 | BRACKET, SPRING | 2 |
| 24 | 338433 | DOOR WELDMENT (Production ONLY) | 1 |
| 24a | 338433-S | DOOR WELDMENT (For Field Replacement) | 1 |
| 25 | 0509264 | BUSHING, SIDE DOOR | 2 |
| 26 | 0510459 | SPRING, DOOR | 2 |

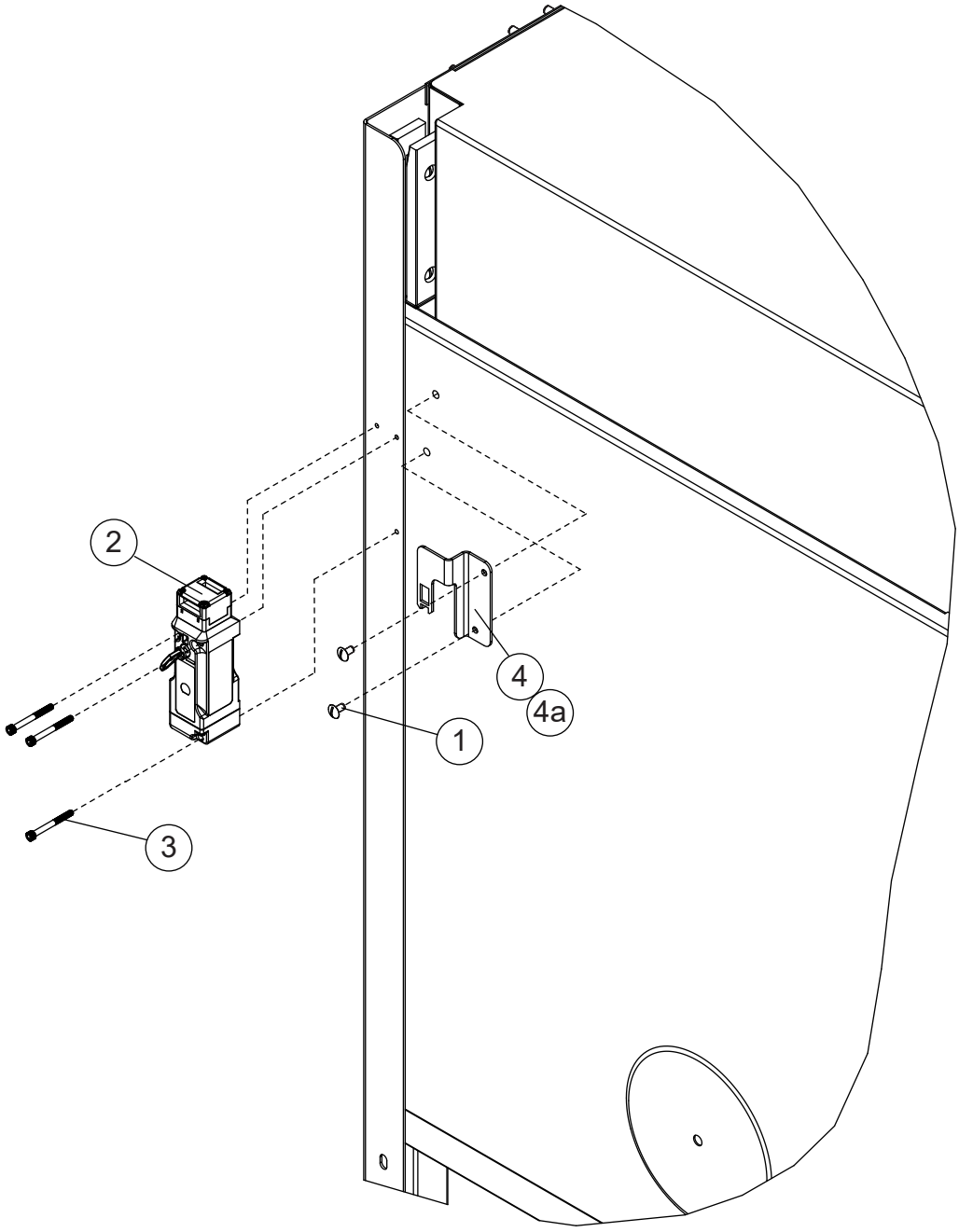


**LEFT-HAND MOUNTING SHOWN**

| Item No. | Part No. | Description | Qty. |
|---|---|---|---|
| 1 | 100097 | SCREW, 10-32 X 1/2", TRUSS HEAD SST | 2 |
| 2 | 117232 | SWITCH, INTERLOCK, IDEC | 1 |
| 3 | 117372 | SOCKET HEAD, CAP SCREW, 8-32 X 1.625" X 18-8 SST | 3 |
| 4 | 340513 | DOOR LOCK PLUNGER, LH-MOUNTED | 1 |
| 4a | 340512 | DOOR LOCK PLUNGER, RH-MOUNTED | 1 |

**Back Support and Guides - DH6000T**

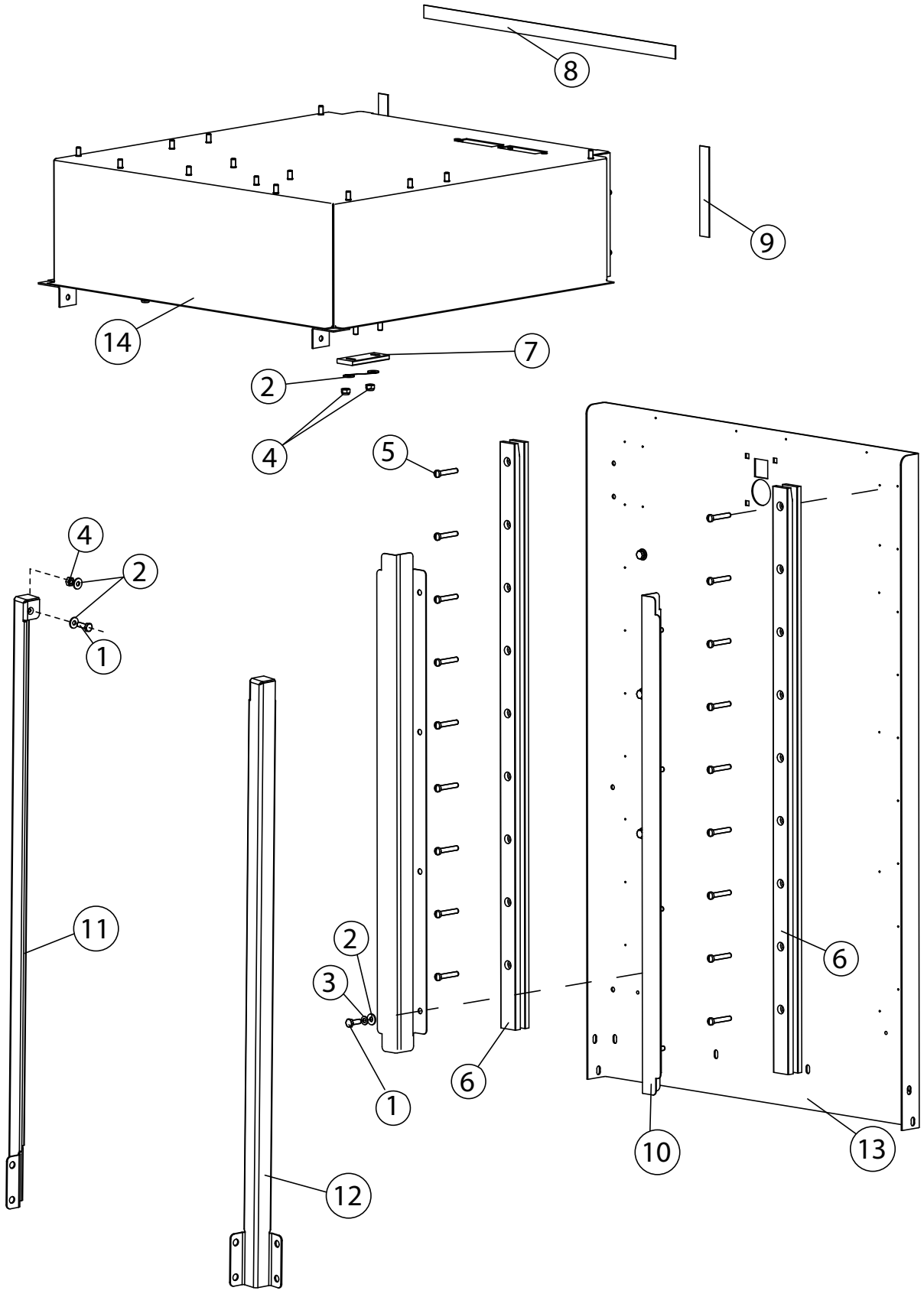

| Item No. | Part No. | Description | Qty. |
|---|---|---|---|
| 1 | 100736 | BOLT, HEX HEAD, 1/4-20 X 3/4" SST | 18 |
| 2 | 106026 | WASHER, FLAT 1/4" SST | 24 |
| 3 | 106482 | WASHER, LOCK 1/4" SPLIT, SST | 16 |
| 4 | 107967 | NUT, GRIP, 1/4-20 SST W/NYLON INSERT | 6 |
| 5 | 114866 | SCREW, FILLISTER HEAD, 1/4-20 X 1-1/2" SST | 18 |
| 6 | 114886 | GUIDE, HOOD | 2 |
| 7 | 116425 | HOOD, GUIDE STATIONARY | 2 |
| 8 | 207315 | GASKET, 20-1/4" LG X 3/4" WD PORON 1/8" THK. | 1 |
| 9 | 207316 | GASKET, 5-1/4" LG X 3/4" WD PORON 1/8" THK. | 2 |
| 10 | 334621 | BAFFLE, DEFLECTOR HOOD | 2 |
| 11 | 340532 | VERTICAL HOOD SUPPORT, LH | 1 |
| 12 | 340533 | VERTICAL HOOD SUPPORT, RH | 1 |
| 13 | 338486 | BACK SUPPORT, WELDMENT | 1 |
| 14 | 339587 | TOP, HOOD | 1 |

**Back Support and Guides - DH6000**

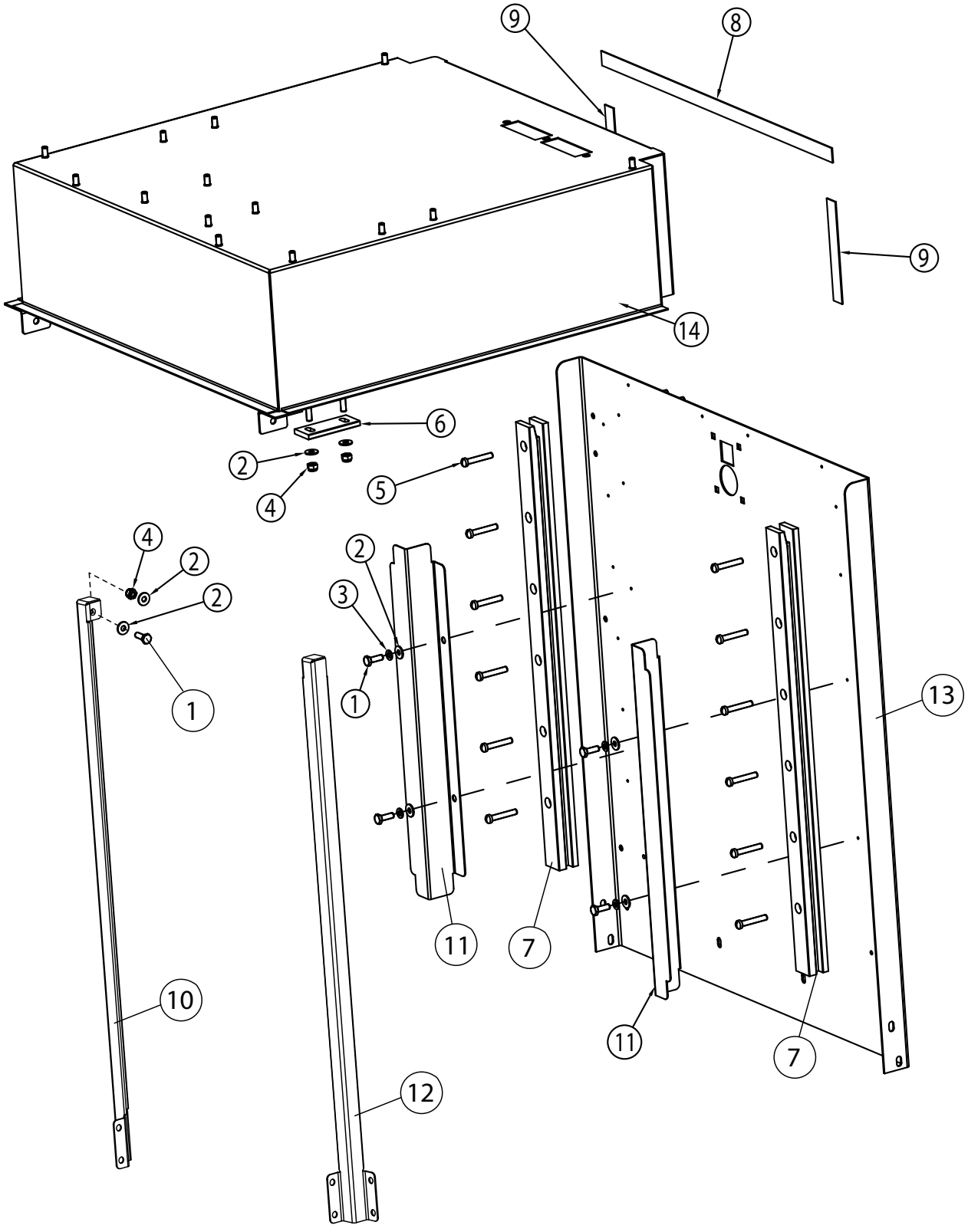

| Item No. | Part No. | Description | Qty. |
|---|---|---|---|
| 1 | 100736 | BOLT, HEX HEAD, 1/4-20 X 3/4" SST | 6 |
| 2 | 106026 | WASHER, FLAT 1/4" SST | 12 |
| 3 | 106482 | WASHER, LOCK 1/4" SPLIT, SST | 4 |
| 4 | 107967 | GRIP NUT, 1/4-20 SST W/NYLON INSERT | 6 |
| 5 | 117012 | SCREW, FILLISTER HEAD, 1/4-20 X 1" SST | 12 |
| 6 | 116425 | HOOD, GUIDE STATIONARY | 2 |
| 7 | 116773 | GUIDE, DOOR DH6000 | 2 |
| 8 | 207315 | GASKET, 20-1/4" LG X 3/4" WD PORON 1/8" THK. | 1 |
| 9 | 207316 | GASKET, 5-1/4" LG X 3/4" WD PORON 1/8" THK. | 2 |
| 10 | 340575 | VERTICAL HOOD SUPPORT, LH | 1 |
| 11 | 338410 | BAFFLE, DEFLECTOR HOOD | 2 |
| 12 | 334576 | VERTICAL HOOD SUPPORT, RH | 1 |
| 13 | 338431 | BACK SUPPORT, WELDMENT | 1 |
| 14 | 339587 | TOP, HOOD | 1 |

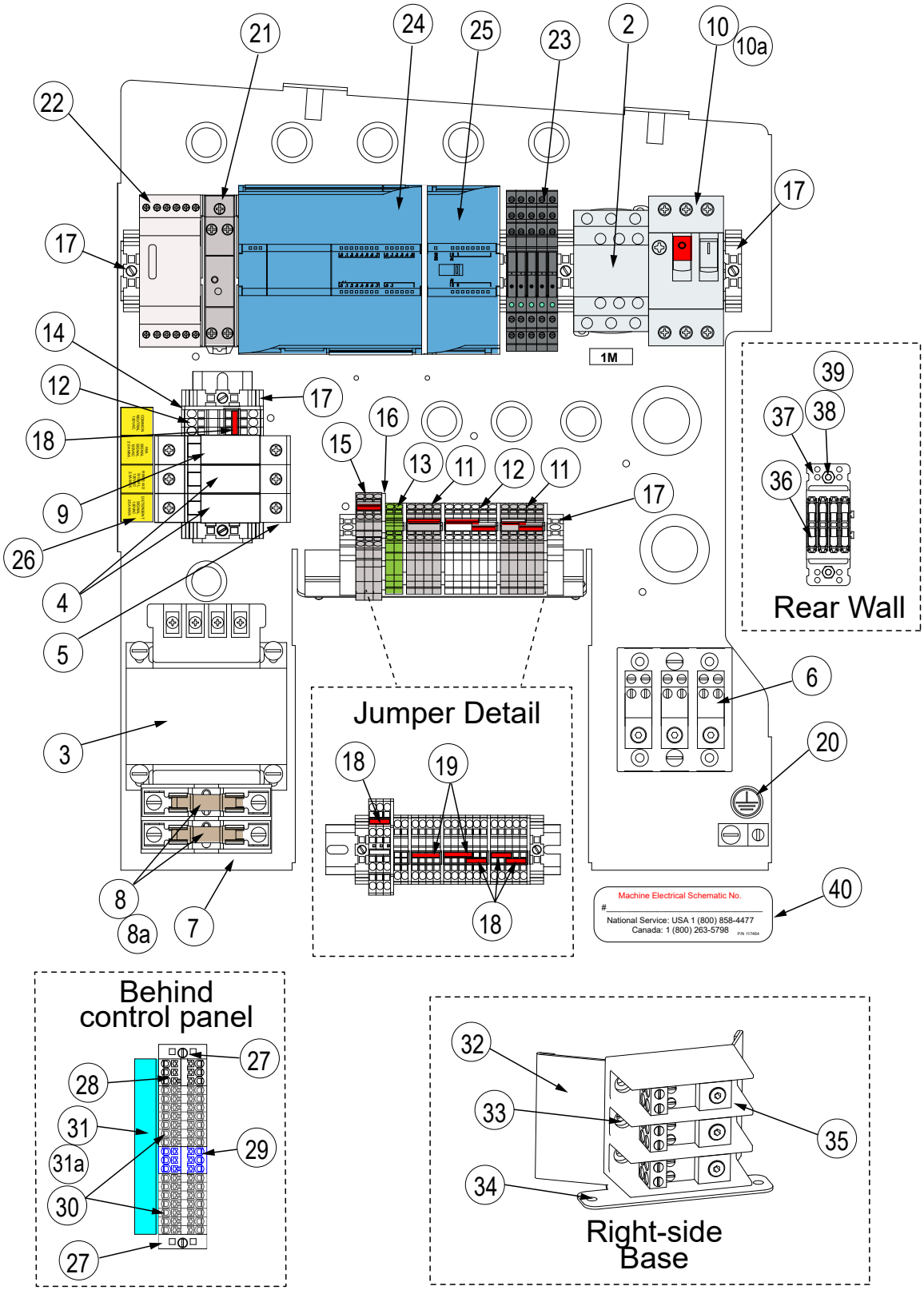
21
24
25
23
2
10
10a
22
17
17
14
12
18
9
26
4
5
3
8
8a
7
16
15
13
11
12
11
17
1M
39
37
38
36
Rear Wall
Jumper Detail
18
19
18
6
20
40
Machine Electrical Schematic No.
#
National Service: USA 1 (800) 858-4477
Canada: 1 (800) 263-5798
P/N 117464
Behind control panel
27
28
31
31a
30
29
27
32
33
35
34
Right-side Base

| Item No. | Part No. | Description | Qty. |
|---|---|---|---|
| 1 | 103310 | LUG, GROUND WIRE | 1 |
| 2 | 108122 | CONTACTOR, 12A, 3-POLE | 1 |
| 3 | 109064 | XFRMR, INPUT 250VA, 240.480/230/460: 110-120V | 1 |
| 4 | 111115 | FUSE, ATMR-2, 2A ONE-TIME | 2 |
| 5 | 111153 | FUSE HOLDER ASSY. | 3 |
| 6 | 111833 | INPUT TERMINAL BLOCK, 175A, 3-POLE | 1 |
| 7 | 112424 | FUSE BLOCK, KIT, 2-POLE | 1 |
| 8 | 112482 | FUSE, ATDR, 3.5A, LPCC-3.5 600V (208-240V/60/1&3) | 2 |
| 8a | 112484 | FUSE, ATDR, 1.5A, LPCC-1.5 600V (480V/60/3) | 2 |
| 9 | 112901 | FUSE, ATDR, 1A, TIME DELAY | 1 |
| 10 | 113161 | MOTOR STARTER, 9.0-14.0A (208-240V/60/1&3 | 1 |
| 10a | 111627 | MOTOR STARTER, 2.5-4.0A (480V/60/3) | 1 |
| 11 | 114512 | TERMINAL SINGLE, PT 2.5, GRAY | 9 |
| 12 | 114514 | TERMINAL SINGLE, PT 2.5, WHITE | 9 |
| 13 | 114515 | TERMINAL SINGLE, GROUND, GREEN PT 2.5 PE | 2 |
| 14 | 114516 | END COVER, SIGNAL TERMINAL D-ST 2.5 | 5 |
| 15 | 114517 | TERMINAL DOUBLE, STTB 2.5 | 3 |
| 16 | 114518 | END COVER, DOUBLE TERMINAL D-PTTB 2.5 | 1 |
| 17 | 114519 | END BLOCK, E/NS 35N | 8 |
| 18 | 114524 | BRIDGE, 3-POLE FBS 3-5 | 6 |
| 19 | 114823 | BRIDGE, 4-POLE FBS 4-5 | 2 |
| 20 | 115098 | LABEL, GROUND, GREEN 3/4" | 1 |
| 21 | 115607 | SLIM 24VDC, 30W, POWER SUPPLY, PSSR-VC24 | 1 |
| 22 | 117243 | DETERGENT SIGNAL CONDITIONER, DC VERSION | 1 |
| 23 | 117423 | SLIM RELAY, 6A, 110VAC/DC | 5 |
| 24 | 117446 | PLC, SIEMANS S7-1214C "Needs Programming" | 1 |
| 25 | 117447 | RTD TEMPERATURE MODULE, 4CH, SIEMENS SM 1231 | 1 |
| 26 | 117470 | LABEL, FAN/RINSE/DET CONNECTIONS | 1 |
| 27 | 117515 | TERMINAL STRIP END BLOCK, PTFIX-F | 2 |
| 28 | 117516 | TERMINAL STRIP, 6PT BRIDGED WHITE, PTFIX 6 X 2.5 WH | 1 |
| 29 | 117517 | TERMINAL STRIP, 6PT BRIDGED BLUE, PTFIX 6 X 2.5 BU | 1 |
| 30 | 117518 | TERMINAL STRIP, 2PT GRAY, PTFIX 2 X 2.5 GY | 14 |
| 31 | 117545 | LABEL, TERMINAL STRIP, BLUE (*For mechanical DWT*) | 1 |
| 31a | 117663 | LABEL, TERMINAL STRIP, BLUE (*For Electric DWT/Drain Pump)* | 1 |
| 32 | 340539 | BRACKET, 2-POINT, INCOMING ELECTRICAL COMPONENTS | 1 |
| 33 | 100007 | SCREW, TRUSS HD, 10-32" X 3/8" SST | 2 |
| 34 | 107136 | BOLT, 10-32 X 38" HEX HEAD, SST | 2 |
| 35 | 111833 | INPUT TERMINAL BLOCK, 175A 3-POLE | 2 |
| 36 | 117525 | INLINE SPLICE, 2-CONDUCTOR | 4 |
| 37 | 117559 | MOUNT CARRIER, INLINE SPLICE TERMINAL | 1 |
| 38 | 108954 | HEX GRIP NUT, 6-32 SST W/NYLON INSERT | 2 |
| 39 | 106382 | SCREW, TRUSS HEAD 6-32 X 3/8" SST | 2 |
| 40 | 117464 | LABEL, ELECTRICAL SCHEMATIC NO. | 1 |

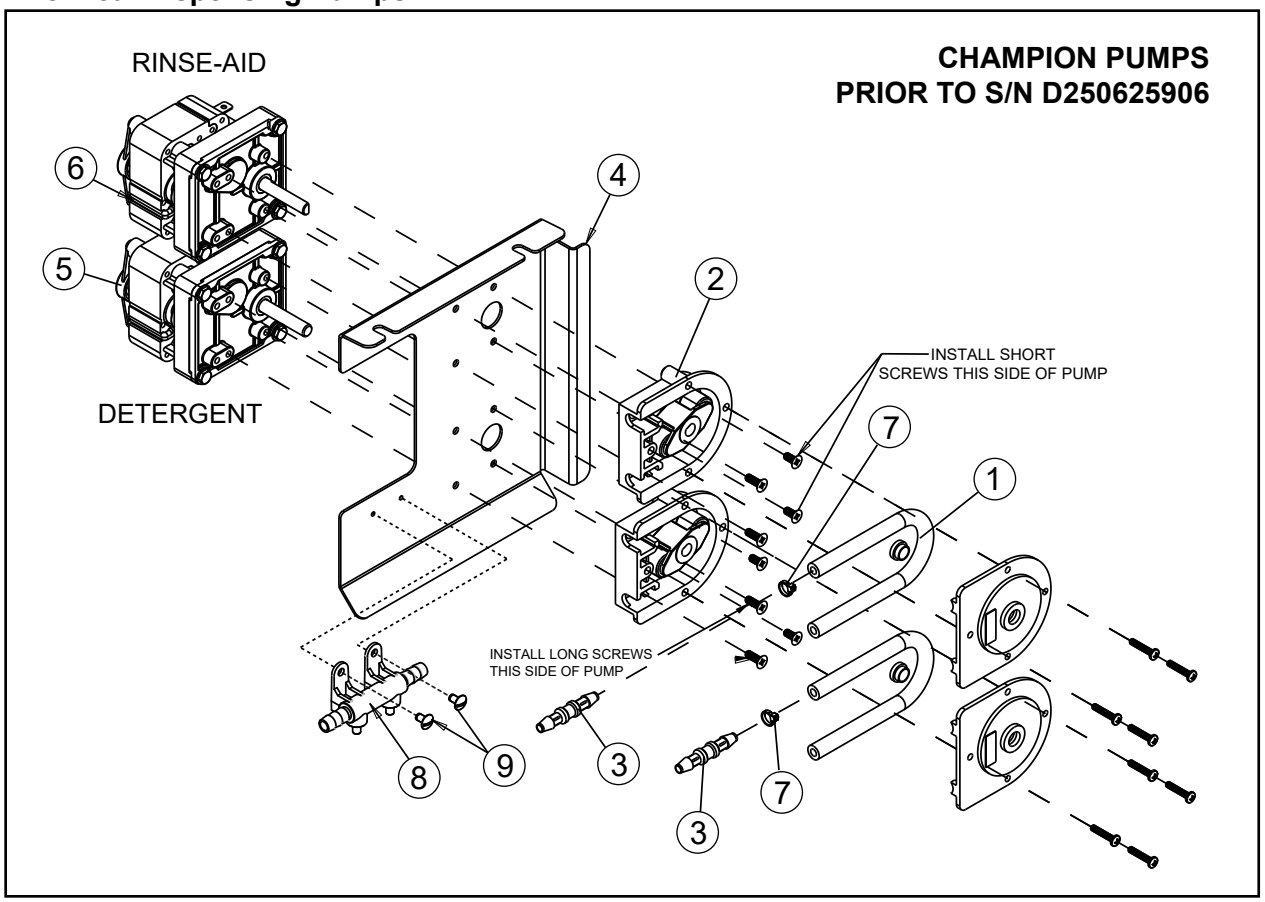
RINSE-AID
CHAMPION PUMPS
PRIOR TO S/N D250625906
6
5
4
2
INSTALL SHORT
SCREWS THIS SIDE OF PUMP
DETERGENT
7
1
INSTALL LONG SCREWS
THIS SIDE OF PUMP
8
9
3
7
3

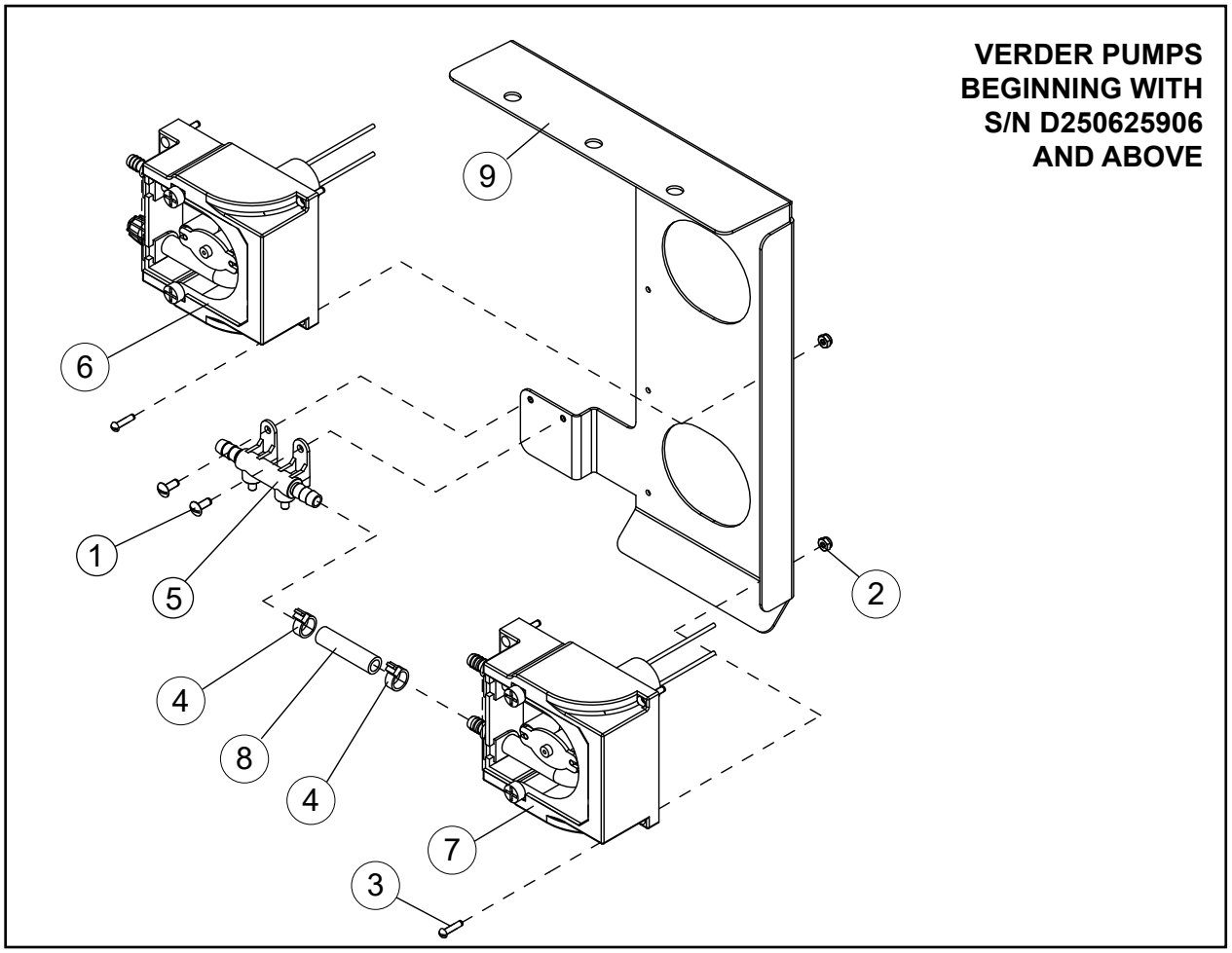
VERDER PUMPS
BEGINNING WITH
S/N D250625906
AND ABOVE
9
6
1
5
2
4
8
4
7
3

## CHAMPION PUMPS - PRIOR TO S/N D250625906

| Item No. | Part No. | Description | Qty. |
|---|---|---|---|
| 1 | 114202 | TUBE, SANTOPRENE, TPE6ON 3/16" X 3/8" X 9" LG. | 2 |
| 2 | 114203 | HEAD, PUMP PERISTALTIC ASSY. KIT, WITH ROLLERS | 2 |
| 3 | 116979 | HOSE BARB, 1/4" TO 1/4" POLYETHYLENE | 2 |
| 4 | 340523 | BRACKET, TWIN DETERGENT PUMP MOUNT | 1 |
| 5 | 0510870-1 | GEARMOTOR, 108 RPM, 115VAC DETERGENT 220 ML/MIN | 1 |
| 6 | 0510872-1 | GEARMOTOR, 14 RPM, 115VAC, RINSE-AID | 1 |
| 7 | 114566 | CABLE TIE, MINIATURE, 7" | 2 |
| 8 | 117011 | SENSOR, INLINE | 1 |
| 9 | 106460 | SCREW, 6-32 X 1/4", TRUSS HEAD SST | 2 |

## VERDER PUMPS
## BEGINNING WITH S/N D250625906 AND ABOVE

| Item No. | Part No. | Description | Qty. |
|---|---|---|---|
| 1 | 106382 | SCREW, TRUSS HEAD, 6/32 X 3/8" SST | 2 |
| 2 | 107016 | GRIP NUT, 4-40 W/NYLON INSERT SST | 8 |
| 3 | 110110 | SCREW, ROUND HEAD, 4-40 X 1/2" SST | 8 |
| 4 | 111322 | TIE WRAP, CATAMOUNT, L-14-50-9-C | 2 |
| 5 | 117011 | SENSOR, INLINE CONDUCTIVITY, GEN2 | 1 |
| 6 | 117818 | PUMP, PERISTALTIC, 10RPM, VERDER, MP2-P, 1.5 L/H | 1 |
| 7 | 117821 | PUMP, PERISTALTIC, 65RPM, VERDER, MP2-P, 10 L/H | 1 |
| 8 | 208031 | TUBE, VINYL 1/4" ID X 3/8" OD X1.5" LG. | 1 |
| 9 | 341209 | BRACKET, TWIN DETERGENT (VERDER) PUMP MOUNT | 1 |

## Wash Tank

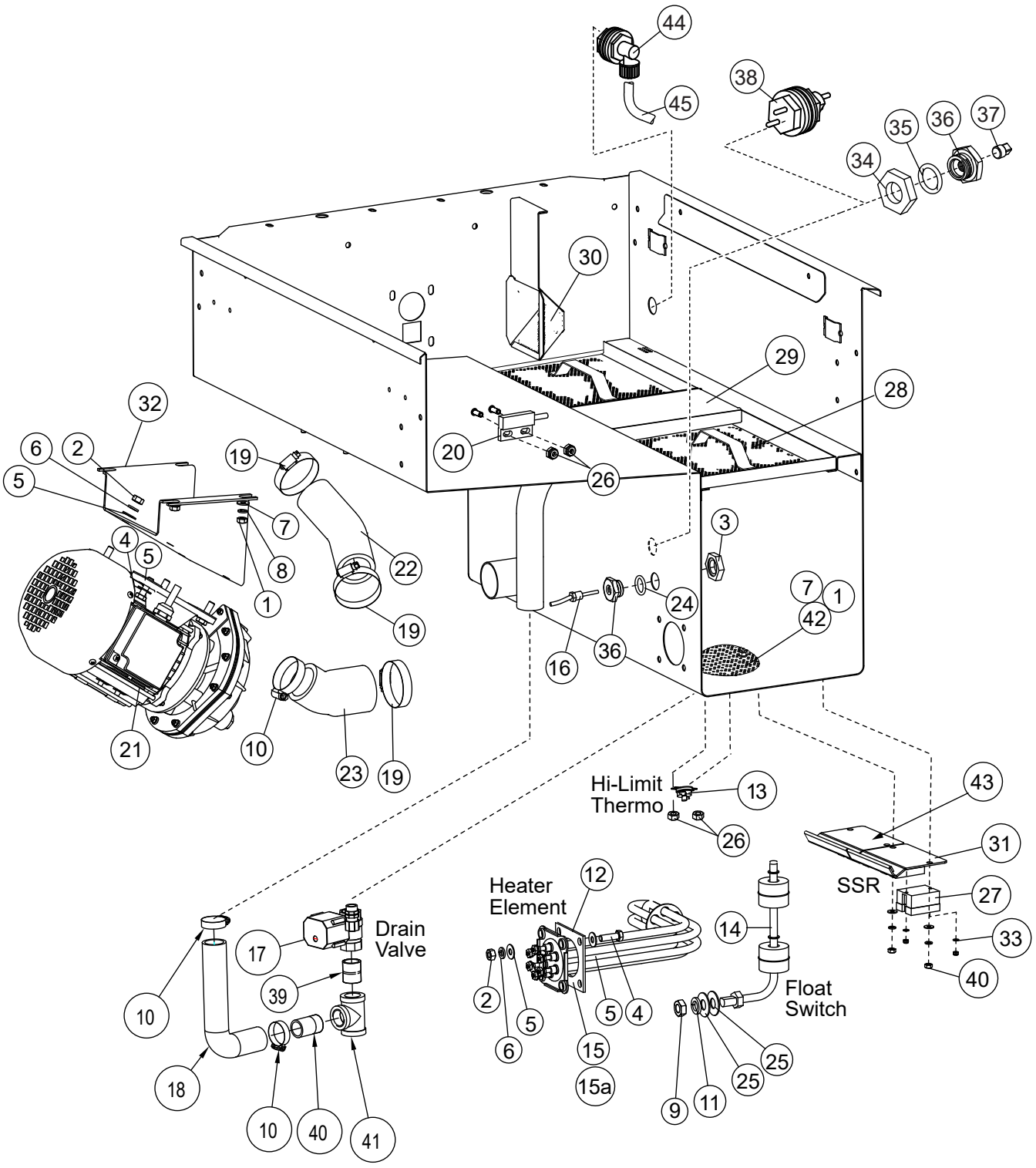

44
45
38
35
36
37
34
30
29
28
32
6
2
5
19
20
26
7
4
5
8
22
1
3
7
1
42
24
19
16
36
21
10
23
19
Hi-Limit
Thermo
13
26
43
31
SSR
27
33
40
Heater
Element
12
14
Drain
Valve
17
39
10
2
5
6
5
4
15
15a
Float
Switch
25
25
9
11
18
10
40
41

| Item No. | Part No. | Description | Qty. |
|---|---|---|---|
| 1 | 100003 | NUT, PLAIN 1/4-20 SST | 7 |
| 2 | 100154 | NUT, PLAIN 5/16" SST | 8 |
| 3 | 100547 | LOCKNUT, 1/2" NPT SST FORGED | 2 |
| 4 | 100740 | BOLT, HEX HEAD 5/16-18 X 1" SST | 8 |
| 5 | 102376 | WASHER, FLAT 5/16" SST | 16 |
| 6 | 106013 | WASHER, LOCK 5/16" SPLIT SST | 8 |
| 7 | 106026 | WASHER, FLAT 1/4" SST | 7 |
| 8 | 106482 | WASHER, LOCK 1/4" SPLIT SST | 7 |
| 9 | 107089 | NUT, JAM 1/2-13 SST | 1 |
| 10 | 107340 | CLAMP, HOSE M28 W/CS SCREW | 3 |
| 11 | 107589 | WASHER, LOCK 1/2" SPLIT SST | 1 |
| 12 | 108345 | GASKET, HEATER, 3" X 3" X 1/8"- 2-HOLE | 1 |
| 13 | 113604 | THERMOSTAT FIXED HIGH LIMIT, SNAP, 212°F | 1 |
| 14 | 113291 | FLOAT SWITCH | 1 |
| 15 | 114178 | HEATER, 5.2KW 208-240/1-3 90° TANK | 1 |
| 15a | 114179 | HEATER, 5.2KW, 480V/60/3 90° TANK | 1 |
| 16 | 117454 | RTD TEMPERATURE SENSOR | 1 |
| 17 | 117659 | VALVE, ELECTRIC DRAIN, NC, 115VAC, W/COVER | 1 |
| 18 | 117298 | HOSE, OVERFLOW, 90° | 1 |
| 19 | 114720 | CLAMP, HOSE M36 W/CS SCREW | 5 |
| 20 | 113721 | SWITCH,DOOR SAFETY | 1 |
| 21 | 115143 | 1HP PUMP/2HP MOTOR ASSY (SEE PAGE 3 FOR OTHERS) | 1 |
| 22 | 117215 | HOSE, PUMP DISCHARGE | 1 |
| 23 | 117216 | HOSE,  PUMP SUCTION | 1 |
| 24 | 115489 | O-RING | 2 |
| 25 | 115490 | WASHER, FLAT | 2 |
| 26 | 108954 | GRIP NUT, 6-32 SST W/NYLON INSERT | 8 |
| 27 | 115648 | RELAY, SOLID STATE, 90A | 4 |
| 28 | 305164 | SCREEN, WELDMENT, 10-3/8" | 2 |
| 29 | 332544 | SUPPORT, FILLER SCREEN | 1 |
| 30 | 333021 | SCREEN, SUCTION | 1 |
| 31 | 340518 | PLATE, HEAT SINK | 1 |
| 32 | 338901 | BRACKET, PUMP MOUNTING | 1 |
| 33 | 115467 | WASHER | 4 |
| 34 | 100547 | LOCKNUT, 1/2" NPT, SST | 1 |
| 35 | 107414 | TUBING, HIGH DENSITY | 6 FT. |
| 36 | 115530 | ADAPTER | 1 |
| 37 | 100210 | PLUG, 1/8" NPT, SQUARE HEAD, SST | |
| 38 | 116785 | PROBE, CHEMICAL P120S, KNIGHT #7005190 | 1 |
| 39 | 100694 | NIPPLE, CLOSE 1" NPT SST | 1 |
| 40 | 116431 | NIPPLE TOE, 1" X 2" SST | 1 |
| 41 | 102530 | TEE, 1" NPT SST | 1 |
| 42 | 304816 | SCREEN, DRAIN 6" DIA. | 1 |
| 43 | 110563 | HEAT SINK COMPOUND | A/R |
| 44 | 116780 | FITTING, KNIGHT DETERGENT INJECTOR | 1 |

## Optional Electric Drain Water Tempering Assembly - Beginning with S/N D230623061

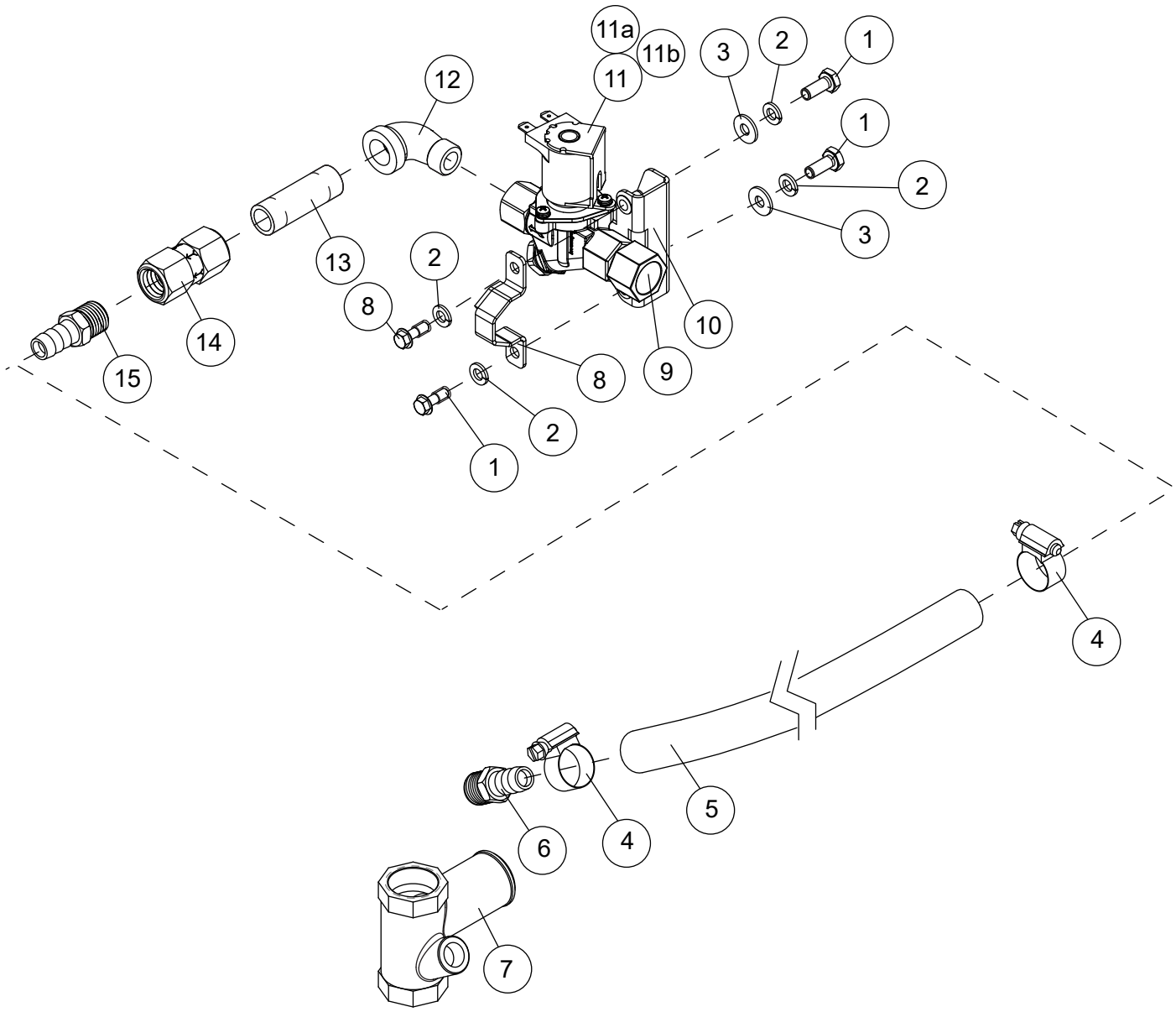

**NOTE:**
THE MECHANICAL DWT ASSEMBLY
P/N 117084 IS NO LONGER AVAILABLE.

## Optional Electric Drain Water Tempering Assembly - Beginning with S/N D230623061

| Item No. | Part No. | Description | Qty. |
|---|---|---|---|
| 1 | 100735 | BOLT, HEX HEAD, 1/4-20 X 5/8" SST | 4 |
| 2 | 106482 | WASHER, LOCK 1/4", SPLIT, SST | 4 |
| 3 | 106062 | WASHER, FLAT, 1/4", SST | 2 |
| 4 | 105994 | CLAMP, HOSE, M10, 14/27, SST GEAR-TYPE | 2 |
| 5 | 207971 | HOSE, BLUE, 1/2" ID, DWT INJECTION, DM | 1 |
| 6 | 117597 | BARB, HOSE ST, 3/8" NPT, 1/2" H SST, 304 | 1 |
| 7 | 117578 | MANIFOLD, DRAIN TEMPERING | 1 |
| 8 | 340915 | CLAMP, ELEC., DWT INLET PIPING SUPPORT, DH6000/T-M2 | 1 |
| 9 | 117644 | ADAPTER, 3/8" MPT X1/2" FPT, HEX , BRASS | 1 |
| 10 | 340910 | BRACKET, ELEC., DWT, INLET PIPING, SUPPORT | 1 |
| 11 | 0504952 | VALVE, SOLENOID, W/O FLOW RESTRICTOR (SEE NOTE) | 1 |
| 11a | 0502811 | REPAIR KIT, VALVE SOLENOID | A/R |
| 11b | 0505235 | COIL, SOLENOID, 115V/60/1 | A/R |
| 12 | 102431 | ELBOW, STREET, 3/8" X 90º, BRASS | 1 |
| 13 | 102467 | NIPPLE, 3/8" NPT X 2" LG., BRASS | 1 |
| 14 | 0507324 | VALVE, CHECK, 3/8" | 1 |
| 15 | 112799 | BARB, HOSE ST, 3/8" NPT, X 1/2" H, BRASS | 1 |

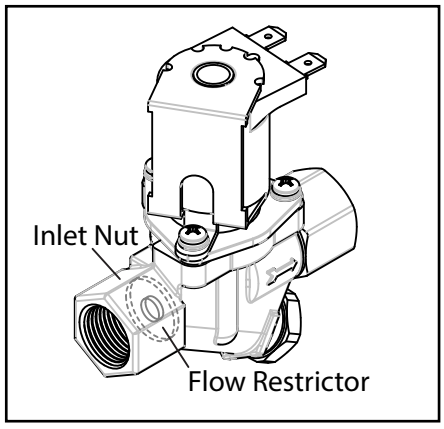


**NOTE:**
REMOVE FLOW RESTRICTOR BEFORE INSTALLING REPLACEMENT VALVE, P/N 0504952, ITEM 11.

## Dish Racks

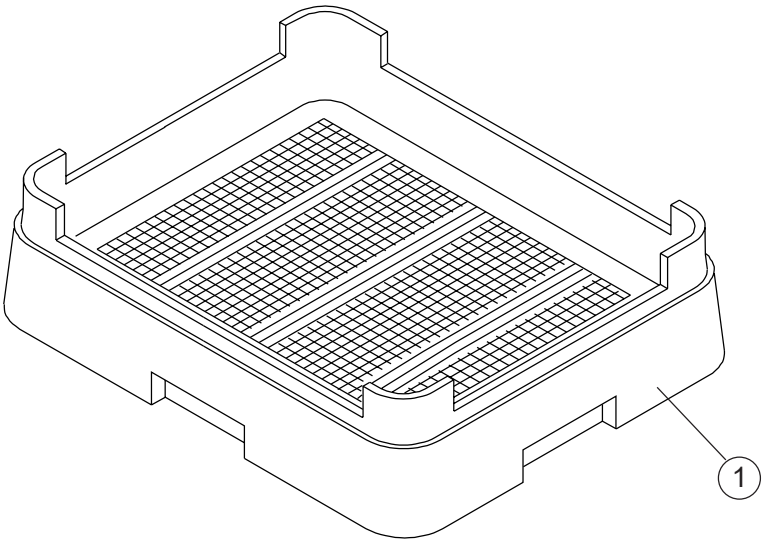


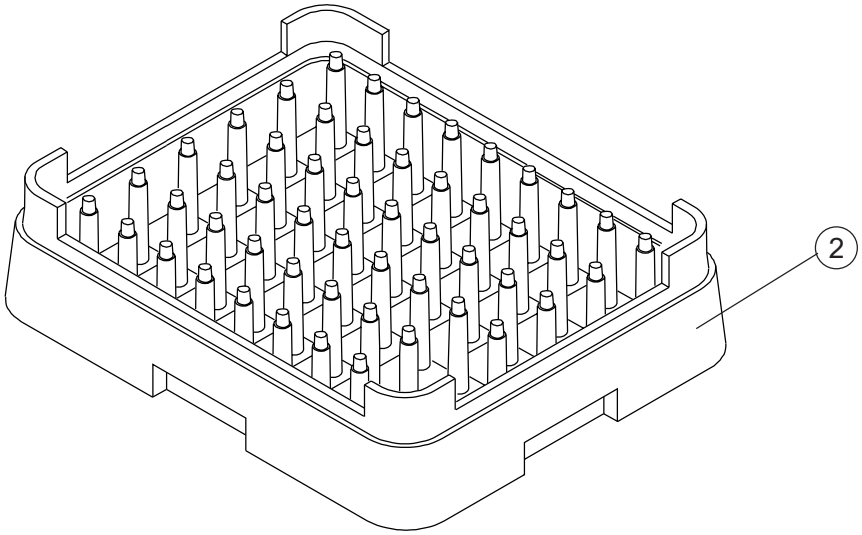

| Item No. | Part No. | Description | Qty. |
|---|---|---|---|
| 1 | 101273 | DISH RACK, FLAT-BOTTOM | A/R |
| 2 | 101285 | DISH RACK, PEG | A/R |
| - | 114356 | RACK, SHEET PAN, OPEN END, (Not Shown) | A/R |